REVISIONS			
SYM	DESCRIPTION	DATE	APPROVAL
—	[illegible]	[illegible]	[illegible]
A	NOR A1J2002 81-06-26	81-08-07	RTW
B	NOR R3J2059/031112	031204	FET

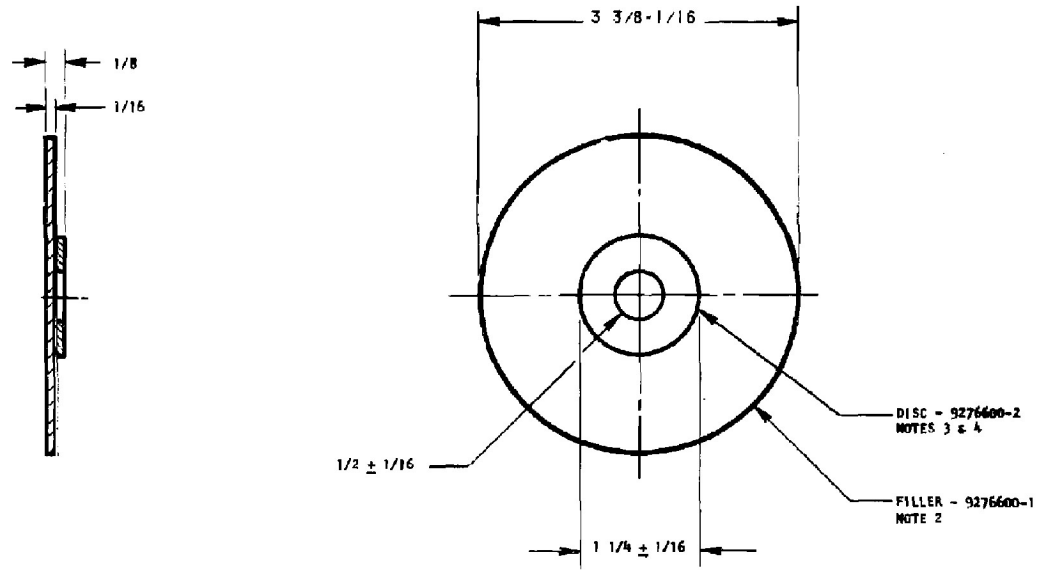

NOTES:-

1 - SPEC MIL-A-2550 APPLIES.

2 - MATERIAL:-CHIPBOARD DWG 9272315

3 - MATERIAL:-FIBERBOARD, GRADE W5S OR W6S, SPEC PPP-F-320

4 - SECURE WITH ADHESIVE, DEXTRIN, SPEC MIL-A-13374

5

U S ARMY ARMAMENT RESEARCH AND DEVELOPMENT COMMAND
DOVER, NEW JERSEY 07801

PART NO.9276600

CODE IDENT NO 19200

FOR ASSOCIATED LISTS, SEE - 9276600

NEXT ASSY	USED ON
APPLICATION	

MECHANICAL PROPERTIES

YP	
TS	
EL2	
RA	
BH	
RH	

DO NOT SCALE DRAWING

UNLESS OTHERWISE SPECIFIED DIMENSIONS ARE IN INCHES

TOLERANCES ON DECIMALS ±

FRACTIONS ± 1/64 ANGLES ±

ORIGINAL DATE OF DRAWING 15 MAY 1974

DRAFTSMAN PB | CHECKER

ENGR | ENGR

ENGR | ENGR

C Banta for [illegible]

[illegible]

U.S. ARMY MUNITIONS COMMAND
PICATINNY ARSENAL, DOVER, NEW JERSEY 07801

FILLER - DISC ASSEMBLY

SIZE	CODE IDENT NO.	
C	19203	9276600

SCALE 1/1 | UNIT WT. | SHEET

DISTRIBUTION STATEMENT A

APPROVED FOR PUBLIC RELEASE; DISTRIBUTION IS UNLIMITED.

[illegible] 1060 MAY 65 REPLACES AMC 1001-4 R, 1 JAN 63 WHICH IS OBSOLETE