DRAWING SIZE D

ZONE	LTR	DESCRIPTION	DATE (YR-MO-DA)	APPROVED
	-	PRODUCT BASELINE FRR M6J2057	960802	HJS
	A	NOR R7J2032 970205	970910	JB
	B	NOR R7J2063 971118	971216	RLV
	C	NOR R1J2035 010717	010808	JB
	D	NOR R2J2044 030113	030630	RLV

NOTES: -

1. APPLICABLE STANDARDS/SPECIFICATION
   A. MIL-STD-100E
   B. ANSI Y14.5M-1982
   C. MIL-A-2550
   D. DTL-12977281

(2) ASSEMBLE TOP AND BOTTOM CONTAINER AS SHOWN. APPLY SUFFICIENT QUANTITY OF ACETONE SPEC O-A-51 AROUND THE COMPLETE JOINT AS INDICATED TO PROVIDE BONDING FOR THE FULL WIDTH AND PERIMETER OF THE JOINT BETWEEN TOP AND BOTTOM. (NOTE 3)

(3) FILL ANY GAPS ALONG CONTAINER SEAM WITH NC ADHESIVE/SEALANT (DWG #12982966).

4. IMPREGNATE EXTERIOR SURFACE WITH A SOLUTION OF SILICONE 9279012 USING HEXANE 12577657 AS SOLVENT TO DEPOSIT .20 TO .46 GRAMS BY WEIGHT OF SILICONE.
   ALTERNATE METHOD – IMPREGNATE EXTERIOR SURFACE ONLY WITH A SOLUTION OF ZONYL 6991 IN WATER (DWG 12997577) TO DEPOSIT .13 TO .27 GRAMS BY WEIGHT OF ZONYL 6991.

5. WEIGHT OF CONTAINER ASSEMBLY 12.5 ± 1.5 GRAMS.

(6) DIMENSIONS ARE FOR TOOL CONTROL AND NEED NOT BE GAGED.

(7) PERFECT FORM AT MMC NOT REQUIRED.

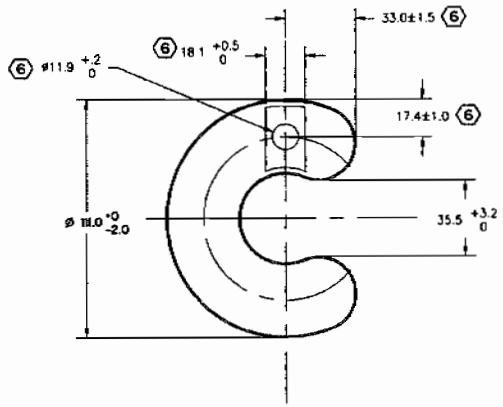

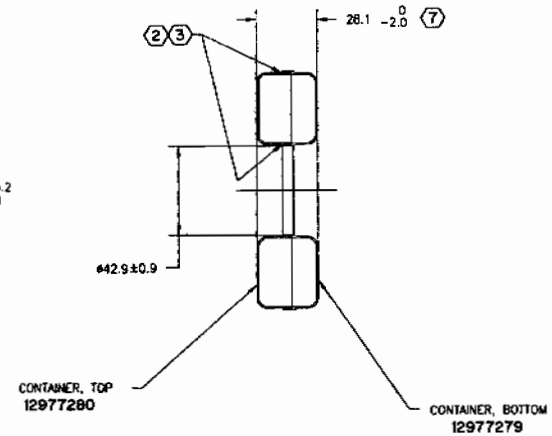

THE UNITED STATES GOVERNMENT HAS UNLIMITED RIGHTS IN THE TECHNICAL DATA IN THIS DOCUMENT. ANY COPY OR MODIFICATION OF THIS DOCUMENT, OR ANY DERIVATIVE WORK CREATED THEREFROM, IN WHOLE OR IN PART, MUST INCLUDE THIS LEGEND. ANY CLAIM BY ANOTHER TO THE RIGHTS OF THE UNITED STATES GOVERNMENT IN THIS DATA IS A VIOLATION OF FEDERAL LAWS AND REGULATIONS.

METRIC

PART NO. 12977281

PMIC		
MECHANICAL PROPERTIES		
YP		
TS		
EL2	12977375	XM234
RA	12977282	XM233
BH	NEXT ASSY	USED ON
RH	APPLICATION	

DO NOT SCALE DRAWING
UNLESS OTHERWISE SPECIFIED DIMENSIONS ARE IN INCHES
TOLERANCES ON DECIMAL 2 PL ± FRACTION ±
3 PL ±
THIRD ANGLE PROJECTION
MATL ENGR

CONTRACT NUMBER
CONTRACTOR
DRAWN BY DR DATE(YR-MO-DA) 960802
CHECKER ENGINEER
DRAWING APPROVAL
DESIGN APPROVAL

DESIGN ACTIVITY U.S. ARMY ARMAMENT RESEARCH, DEVELOPMENT AND ENGINEERING CENTER PICATINNY ARSENAL, NEW JERSEY 07806-5000

CONTAINER ASSEMBLY

SIZE D CAGE CODE 19200 12977281
SCALE UNIT WT. SHEET

DISTRIBUTION STATEMENT A.
APPROVED FOR PUBLIC RELEASE;
DISTRIBUTION IS UNLIMITED.

SMCAR FORM 68, 1 DEC 87(TEMP), REPLACES SMCAR FORM 68, 1 MAR 87(TEMP), WHICH MAY BE USED UNTIL EXHAUSTED

DRAWING SIZE D

REVISIONS				
ZONE	LTR	DESCRIPTION	DATE (YR MO DA)	APPROVED
	-	PRODUCT BASELINE ERR M6J2057	960802	HJS
	A	NOR R7J2032 970205	970910	JB

NOTES:

1. APPLICABLE STANDARDS/SPECIFICATIONS
   A. MIL-STD-100E
   B. ANSI Y14.5M-1982
   C. MIL-A-2550
2. MATERIAL: SEE DRAWING 9381562.

(3) DIMENSIONS ARE FOR TOOL CONTROL AND NEED NOT BE GAGED.

(4) THIS DIMENSION IS A REFERENCED DIMENSION PROVIDED THE DESIGN REQUIREMENTS ARE MET IN THE FINAL ASSEMBLY, SEE DRAWING 12977281.

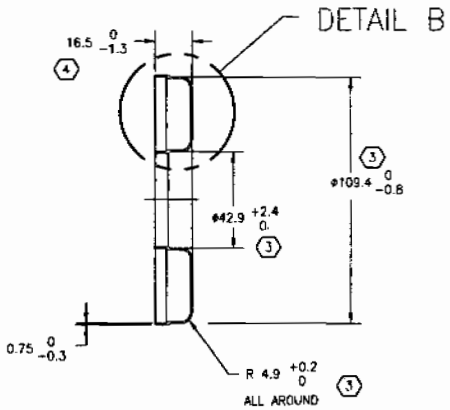

SECTION A–A

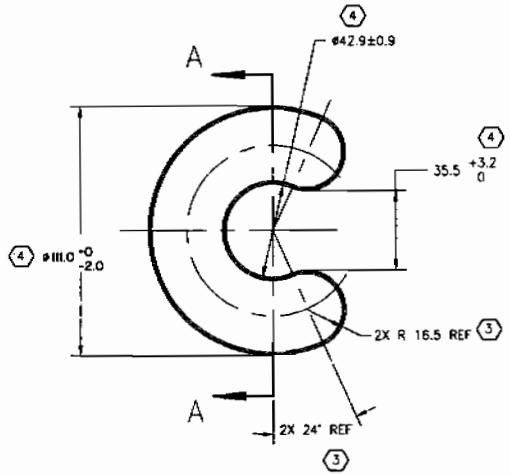

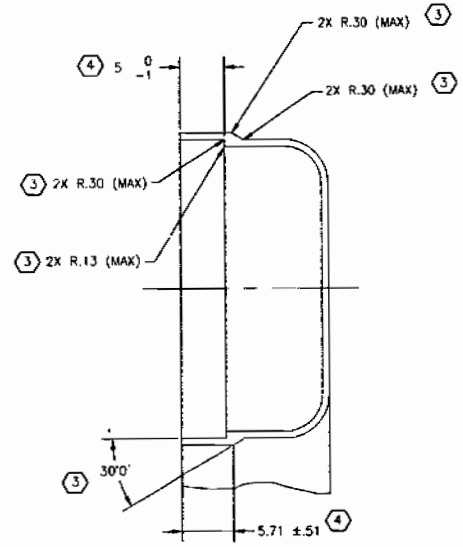

DETAIL B

SCALE: 4/1

METRIC

PART NO. 12977279

PMIC		DO NOT SCALE DRAWING UNLESS OTHERWISE SPECIFIED DIMENSIONS ARE IN INCHES TOLERANCES ON DECIMAL FRACTION 2 PL ± ± 3 PL ±	CONTRACT NUMBER CONTRACTOR
MECHANICAL PROPERTIES YP TS EL2 RA BH RH	NEXT ASSY / USED ON APPLICATION	THIRD ANGLE PROJECTION MATL. ENGR	DRAWN BY DR DATE(YR-MO-DA) 960802 CHECKER ENGINEER DRAWING APPROVAL DESIGN APPROVAL

DESIGN ACTIVITY: U.S. ARMY ARMAMENT RESEARCH, DEVELOPMENT AND ENGINEERING CENTER PICATINNY ARSENAL, NEW JERSEY 07806-5000

CONTAINER, BOTTOM

SIZE	CAGE CODE	
D	19200	12977279

SCALE | UNIT WT. | SHEET

DISTRIBUTION STATEMENT A.
APPROVED FOR PUBLIC RELEASE;
DISTRIBUTION IS UNLIMITED.

SMCAR FORM 68, 1 DEC 87(TEMP), REPLACES SMCAR FORM 68, 1 MAR 87(TEMP), WHICH MAY BE USED UNTIL EXHAUSTED

DRAWING SIZE D

8	7	6	5	4	3	2	1

NOTES: -

1. APPLICABLE STANDARDS/SPECIFICATIONS
   A. MIL-STD-100E
   B. ANSI Y14.5M-1982
   C. MIL-A-2550.

2. MATERIAL: SEE DRAWING 9381562

(3) DIMENSIONS ARE FOR TOOL CONTROL AND NEED NOT BE GAGED.

(4) THIS DIMENSION IS A REFERENCE DIMENSION PROVIDED THE DESIGN REQUIREMENTS ARE MET IN THE FINAL ASSEMBLY, SEE DRAWING 12977281.

REVISIONS

ZONE	LTR	DESCRIPTION	DATE (YR MO DAY)	APPROVED
	-	PRODUCT BASELINE ERR M6J2057	960802	HJS
	A	NOR R7J2032 970205	970910	JB

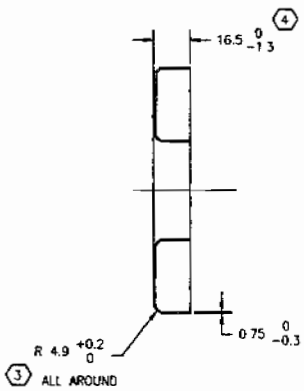

SECTION A-A

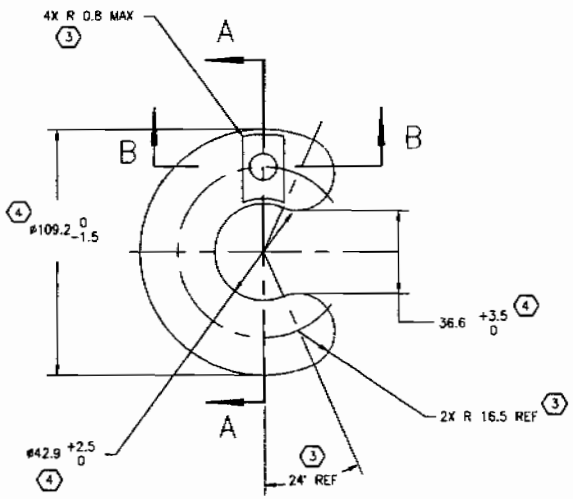

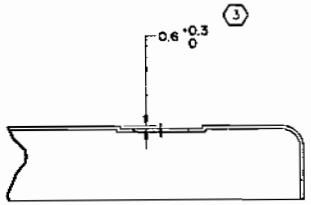

SECTION B-B

SCALE 2/1

METRIC

PART NO. 12977280

PMIC			
MECHANICAL PROPERTIES			
YP			
TS			
EL 2			
RA			
BH			
RH		NEXT ASSY	USED ON
		APPLICATION	

DO NOT SCALE DRAWING
UNLESS OTHERWISE SPECIFIED DIMENSIONS ARE IN INCHES
TOLERANCES ON
DECIMAL FRACTION
2 PL ± ±
3 PL ±
THIRD ANGLE PROJECTION
MATL SHKR

CONTRACT NUMBER
CONTRACTOR
DRAWN BY DR DATE (YR-MO-DAY) 960802
CHECKER ENGINEER
DRAWING APPROVAL
DESIGN APPROVAL

DESIGN ACTIVITY U.S. ARMY ARMAMENT RESEARCH, DEVELOPMENT AND ENGINEERING CENTER PICATINNY ARSENAL, NEW JERSEY 07806-5000

CONTAINER, TOP

SIZE D CAGE CODE 19200 12977280
SCALE 1/1 UNIT WT. SHEET

DISTRIBUTION STATEMENT A.
APPROVED FOR PUBLIC RELEASE;
DISTRIBUTION IS UNLIMITED.

SMCAR FORM 68, 1 DEC 87(TEMP). REPLACES SMCAR FORM 68, 1 MAR 87(TEMP). WHICH MAY BE USED UNTIL EXHAUSTED

NOTE:-
1- APPLICABLE STANDARDS/SPECIFICATIONS:
A. MIL-STD-100E
B. MIL-A-2550

REVISIONS				
ZONE	LTR	DESCRIPTION	DATE (YR MO DA)	APPROVED
	-	PRODUCT BASELINE ERR R7J2063	971216	TPT/RLV
	A	NOR R9J3002 990915	991018	TPT
	B	NOR R2J5175 021015	021119	TPT
	C	NOR R3J2059 031112	031204	FET

COMPOSITION	SPEC	PERCENT BY WEIGHT
ACETONE	ASTM-D329	23 ± 1
ETHANOL	MIL-E-463	34 ± 1
METHYL ABIETATE	GOOD COMMERCIAL GRADE CAS 8050-15-5	7 ± 1
BUTYL ACETATE	ASTM-D303	23 ± 1
NITROCELLULOSE	MIL-DTL-244B	13 ± 1

DISTRIBUTION STATEMENT A

APPROVED FOR PUBLIC RELEASE;
DISTRIBUTION IS UNLIMITED.

FORMULATION DRAWING

PART NO. 12982966

PMIC			
	12977281	M233	
		M234	
	12577568	M230	
MECHANICAL PROPERTIES	9278773	M205; M218; M219; M220	
YP			
TS			
EL2	9312697	M204	
RA		M235	
BH			
RH	NEXT ASSY	USED ON	
	APPLICATION		

DO NOT SCALE DRAWING

UNLESS OTHERWISE SPECIFIED DIMENSIONS ARE IN INCHES
TOLERANCES ON
DECIMAL FRACTION
2 PL ± ±
3 PL ±

THIRD ANGLE PROJECTION

MATL ENGR

DRAWN BY TPT | DATE(YR-MO-DA) 97-09-16
CHECKER | ENGINEER CYM
DRAWING APPROVAL Charles H. Manning
DESIGN APPROVAL Patricia M. Dailey

DESIGN ACTIVITY U.S. ARMY
ARMAMENT RESEARCH, DEVELOPMENT AND ENGINEERING CENTER
PICATINNY ARSENAL, NEW JERSEY 07806-5000

NC ADHESIVE/SEALANT

SIZE	CAGE CODE	
B	19200	12982966
SCALE	UNIT WT.	SHEET

SMCAR FORM 66, 1 MAR 88(TEMP) REPLACES SMCAR FORM 66, 1 JUL 87(TEMP)
WHICH MAY BE USED UNTIL EXHAUSTED

REVISIONS			
SYM	DESCRIPTION	DATE	APPROVAL
A	ERR 7500926-1	11-22-75	[illegible]
B	NOR R2J5175 021015	021119	TPT
C	NOR R3J2059 031112	031204	FET

NOTES:—

1 - INTERPRET DRAWING IN ACCORDANCE WITH STANDARDS PRESCRIBED BY MIL-STD-100

2 - REQUIREMENTS:

A - (NOT FOR USE IN VINYL FOAM)

3 - ONLY AN ITEM PROCURED FROM A VENDOR LISTED ON THIS DRAWING AND IDENTIFIED BY SUCH VENDOR'S IDENTIFYING NUMBER AS ALSO LISTED HEREON HAS BEEN TESTED AND APPROVED BY PICATINNY ARSENAL FOR USE IN (SILICONE). A SUBSTITUTE ITEM SHALL NOT BE USED WITHOUT PRIOR TESTING AND/OR APPROVAL BY PICATINNY ARSENAL.

4 - APPROVED SOURCE(S) OF SUPPLY:-

DOW CORNING CORPORATION
2200 W. SALZBURG RD.
MIDLAND, MICHIGAN, 48686
989-496-4000

SOURCE CONTROL DRAWING

PART NO. 9279012

DISTRIBUTION STATEMENT A

APPROVED FOR PUBLIC RELEASE;
DISTRIBUTION IS UNLIMITED.

NEXT ASSY	USED ON
9277367	CHG PROP
9278773	M205

APPLICATION

MECHANICAL PROPERTIES: YP, TS, EL2, RA, BH, RH

DO NOT SCALE DRAWING
UNLESS OTHERWISE SPECIFIED DIMENSIONS ARE IN INCHES
TOLERANCES ON DECIMALS ±
FRACTIONS ± ANGLES ±

ORIGINAL DATE OF DRAWING: 1 DEC 1972

DRAFTSMAN: [illegible] CHECKER: [illegible]
ENGR: ENGR: [illegible]
ENGR: ENGR:

U.S. ARMY MUNITIONS COMMAND
PICATINNY ARSENAL, DOVER, NEW JERSEY 07801

SILICONE

SIZE	CODE IDENT NO.	
C	19203	9279012

SCALE ~ UNIT WT. SHEET

REVISIONS				
ZONE	LTR	DESCRIPTION	DATE (YR-MO-DA)	APPROVED
	A	NOR M4J5004 940829	950614	RLV
	B	NOR R05J2027 060316	060403	BMG

NOTES:

1. APPLICABLE STANDARDS/SPECIFICATIONS
   A. DOD-STD-00100D(AR)
   B. ANSI Y14.5M-1982
   C. MIL-A-2550.

2. REQUIREMENTS: HEXANE
   TECHNICAL GRADE.

3. IDENTIFICATION OF THE "SUGGESTED SOURCE OF SUPPLY" HEREON IS NOT TO BE CONSTRUED AS A GUARANTEE OF PRESENT OR CONTINUED AVAILABILITY AS A SOURCE OF SUPPLY FOR THE ITEM.

4. ITEM IDENTIFICATION: RUBBER STAMP OR STENCIL THE FOLLOWING MARKING TO CONTAINER IN ACCORDANCE WITH MIL-STD-130.

"19200-12577657"

MFR-[ ]-[ ]

MANUFACTURER'S

CAGE CODE PART NO.

SUGGESTED SOURCE OF SUPPLY		
VENDOR		VENDOR PART NO.
ADDRESS	CAGE CODE	
J.T.BAKER CHEMICAL CO. 222 RED SCHOOL LANE, PHILLIPSBURG,N.J. 08865	70829	N169

THE UNITED STATES GOVERNMENT HAS UNLIMITED RIGHTS IN THE TECHNICAL DATA IN THIS DOCUMENT. ANY COPY OR MODIFICATION OF THIS DOCUMENT, OR ANY DERIVATIVE WORK CREATED THEREFROM, IN WHOLE OR IN PART, MUST INCLUDE THIS LEGEND. ANY CLAIM BY ANOTHER TO THE RIGHTS OF THE UNITED STATES GOVERNMENT IN THIS DATA IS A VIOLATION OF FEDERAL LAWS AND REGULATIONS.

SPECIFICATION CONTROL DRAWING
METRIC PART NO.12577657

DISTRIBUTION STATEMENT D
DISTRIBUTION AUTHORIZED TO THE DEPARTMENT OF DEFENSE (DOD) AND DOD CONTRACTORS ONLY. THIS TECHNICAL DATA PACKAGE CONTAINS SENSITIVE TECHNOLOGY ON A NEW WEAPONS SYSTEM. THIS DETERMINATION WAS MADE ON 28 OCTOBER 1988. OTHER REQUESTS SHALL BE REFERRED TO COMMANDER, ARDEC, ATTN: SMCAR-FSS-DM, PICATINNY ARSENAL, NJ 07806-5000
DESTRUCTION NOTICE
FOR CLASSIFIED DOCUMENTS, FOLLOW PROCEDURES IN DOD 5200.22-M, INDUSTRIAL SECURITY MANUAL, SECTION II-19 OR DOD 5200.1-R, INFORMATION SECURITY PROGRAM REGULATION, CHAPTER IX. FOR UNCLASSIFIED, LIMITED DOCUMENTS, DESTROY BY ANY METHOD THAT WILL PREVENT DISCLOSURE OF CONTENTS OR RECONSTRUCTION OF THE DOCUMENT.

MECHANICAL PROPERTIES	
YP	
TS	
EL2	
RA	
BH	
RH	

NEXT ASSY	USED ON
12577568	M230
APPLICATION	

UNLESS OTHERWISE SPECIFIED DIMENSIONS ARE IN MM TOLERANCES ON
DIMENSIONS ANGLES

THIRD ANGLE PROJECTION

MATL ENGR

CONTRACT NUMBER DAAA21-88-C-0087
CONTRACTOR SOLTAM LTD.
ISRAEL MILITARY INDUSTRIES LTD.

DRAWN BY	DATE (YR-MO-DA)
M.L.	90-05-05
CHECKER M.C.	ENGINEER S.K.

DRAWING APPROVAL
DESIGN APPROVAL

DESIGN ACTIVITY
U.S. ARMY ARMAMENT RESEARCH, DEVELOPMENT AND ENGINEERING CENTER, PICATINNY ARSENAL, NEW JERSEY 07806-5000

HEXANE

C	CAGE CODE 19200	12577657
SCALE NONE	UNIT WT	SHEET

12577657-2

REVISIONS				
ZONE	LTR	DESCRIPTION	DATE (YR MO DA)	APPROVED
	—	PRODUCT BASELINE ERR R1J2035	010808	JB

NOTES:–

1– APPLICABLE STANDARDS/SPECIFICATIONS:–
A– MIL–STD–100E

2– MATERIAL: ZONYL 6991

3– ONLY THE ITEM DESCRIBED ON THIS DRAWING WHEN PROCURED FROM THE VENDOR(S) LISTED HEREIN IS APPROVED BY ARDEC PICATINNY ARSENAL NEW JERSEY 07806–5000 FOR USE IN THE APPLICATIONS SPECIFIED HEREIN. A SUBSTITUTE ITEM SHALL NOT BE USED WITHOUT PRIOR APPROVAL BY ARDEC.

4– IDENTIFICATION OF THE APPROVED SOURCE(S) OF SUPPLY IS NOT TO BE CONSTRUED AS A GUARANTEE OF PRESENT OR CONTINUING AVAILABILITY AS A SOURCE OF SUPPLY FOR THE ITEM DESCRIBED ON THE DRAWING.

APPROVED SOURCE OF SUPPLY			
VENDOR			
PART NO.	ADDRESS	CAGE CODE	PART NO.
1297577	DuPONT 1007 MARKET STREET WILMINGTON, DE 19898	19200	ZONYL 6991

SOURCE CONTROL DRAWING

PART NO. 12997577

PMIC			
MECHANICAL PROPERTIES			
YP			
TS			
EL2			
RA			
BH			
RH			
	9312697	CHG PROP,M204	
	9278773	CHG PROP,M205	
	12977281	CHG PROP, M233/M234	
	NEXT ASSY	USED ON	
	APPLICATION		

DO NOT SCALE DRAWING

UNLESS OTHERWISE SPECIFIED DIMENSIONS ARE IN INCHES
TOLERANCES ON
DECIMAL FRACTION
2 PL ± ±
3 PL ±

THIRD ANGLE PROJECTION

MATL ENGR

CONTRACT NUMBER

CONTRACTOR

DRAWN BY J BRENNAN — DATE(YR-MO-DA) 01-08-08

CHECKER — ENGINEER

DRAWING APPROVAL 01-08-13

DESIGN APPROVAL 01-08-13

DESIGN ACTIVITY U.S. ARMY
ARMAMENT RESEARCH, DEVELOPMENT AND ENGINEERING CENTER
PICATINNY ARSENAL, NEW JERSEY 07806-5000

WATERPROOFING AGENT

SIZE	CAGE CODE	
B	19200	12997577
SCALE	UNIT WT.	SHEET

SMCAR FORM 66, 1 MAR 88(TEMP) REPLACES SMCAR FORM 66, 1 JUL 87(TEMP)
WHICH MAY BE USED UNTIL EXHAUSTED

(DRAWING SIZE C
ARRADCOMR 70-12)

REVISIONS			
SYM	DESCRIPTION	DATE	APPROVAL

REVISIONS			
SYM	DESCRIPTION	DATE	APPROVAL
—	PRODUCTION RELEASE ERR A4A2506	84-05-11	RW
A	NOR A4J0002 840409 (ECP A4J0012 841003)	860329	RW
B	NOR M3J3045 940110	940413	PT
C	NOR M4J3022 940713	940803	RV
D	NOR M5J3089 960111	960216	JB
E	NOR M6J2075 961023	961215	JB
F	NOR R7J2048 970821	970929	JB
G	NOR R8J2046 980706	980813	RLV
H	NOR R1J2081 020108	020307	TPT
J	NOR R2J5175 021015	021119	TPT
L	NOR R3J2059 031112	031204	FET
M	NOR R05J3011 060306	060504	TPT

NOTES:—

1 - SPEC MIL-A-2550 AND SPEC MIL-P-70475 APPLIES.

2 - MATERIAL:- COMPOSITION - RECOMMENDED

	PERCENT BY WEIGHT
A - NITROCELLULOSE, GRADE B, MIL-DTL-244B	78.00 ± 3.00%
B - ETHYL CENTRALITE, SPEC MIL-E-255A	1.90 ± 0.60%
C - RESIN AND ADDITIVES:- RESIN 9247365-1 OR 9247365-2 OR 9247365-3	7.00 (NOTE 4)
ADDITIVE 9247368-1 OR 9247368-2	
D - FIBER:- KRAFT, CID A-A-59225	3.75 (NOTE 4)
ACRYLIC, FIBRILLATED (SEE DRAWING B9235668)	3.75 ± 1.00%
POLYESTER, STAPLE FIBER SEE DRAWING NO. 9279014	5.60 (NOTE 4)

3 - MATERIAL:- COMPOSITION - ALTERNATIVE

A - NITROCELLULOSE, GRADE B, MIL-DTL-244B	78.00 ± 3.0%
B - DIPHENYLAMINE, SPEC MIL-D-98	1.00 ± 0.3%
C - RESIN AND ADDITIVES:- RESIN 9247365-1 OR 9247365-2 OR 9247365-3	7.00 (NOTE 4)
ADDITIVE 9247368-1 OR 9247368-2	
D - FIBER:- KRAFT, CID A-A-59225	3.75 (NOTE 4)
ACRYLIC, FIBRILLATED (SEE DRAWING B9235668)	3.75 ± 1.0%
POLYESTER, STAPLE FIBER SEE DRAWING NO. 9279014	6.50 (NOTE 4)

4 - WEIGHT PERCENT OF COMPOSITION IS ADVISORY.

CURRENT DESIGN ACTIVITY CAGE CODE 19200
U.S. ARMY
ARMAMENT RESEARCH, DEVELOPMENT AND ENGINEERING CENTER
PICATINNY ARSENAL, NEW JERSEY 07806-5000

SEE SEPARATE PARTS LIST 9381562

PART NO. 9381562

9312700	
9312699	
9345312	CHG, PROP, M204
9345313	
9278774	CHG, PROP, M205
9278775	
NEXT ASSY	USED ON
APPLICATION	

MECHANICAL PROPERTIES: YP, TS, EL2, RA, BH, RH

DO NOT SCALE DRAWING
UNLESS OTHERWISE SPECIFIED DIMENSIONS ARE IN INCHES
TOLERANCES ON DECIMALS ±
FRACTIONS ± ANGLES ±

ORIGINAL DATE OF DRAWING 84 — 05 — 11
DRAFTSMAN RW CHECKER
ENGR ENGR
ENGR ENGR

U.S. ARMY ARMAMENT RESEARCH AND DEVELOPMENT CENTER
DOVER, NEW JERSEY 07801

COMPOSITION

SIZE C CAGE CODE 19200 9381562
SCALE NONE UNIT WT. SHEET

DISTRIBUTION STATEMENT A
APPROVED FOR PUBLIC RELEASE; DISTRIBUTION IS UNLIMITED.

ARRADCOM FORM 67 AUG 77 REPLACES SARPA FORM 1040 OCT 73 WHICH MAY BE USED UNTIL EXHAUSTED