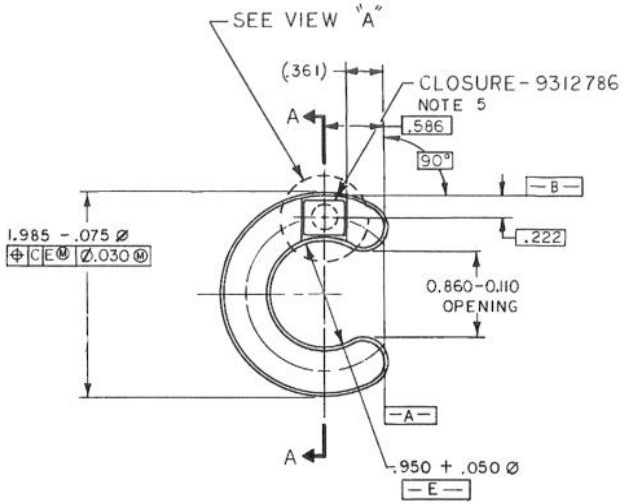

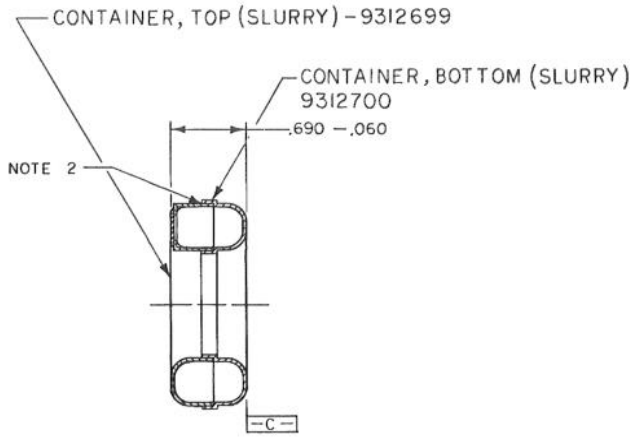

SECTION A-A

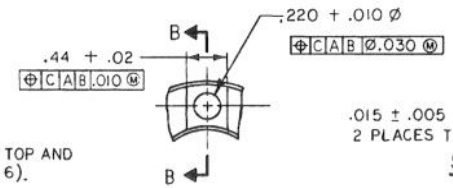

VIEW - "A"
SHOWN WITHOUT CLOSURE

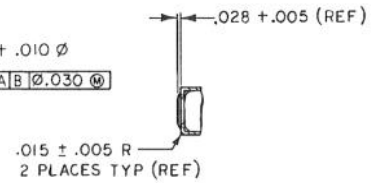

SECTION B-B

NOTES:—

1 — SPEC MIL — A — 2550, ANSI Y14.5-1973 AND SPEC MIL - C - 48868 APPLY.

2 — ASSEMBLE TOP AND BOTTOM CONTAINER AS SHOWN. APPLY SUFFICIENT QUANTITY OF ACETONE, SPEC O-A-51 (APPROX .75 ML) AROUND THE COMPLETE JOINT AS INDICATED TO PROVIDE BONDING FOR THE FULL WIDTH AND PERIMETER OF THE JOINT BETWEEN THE TOP AND BOTTOM. ASSEMBLY SHALL BE IN A RESTRAINED POSITION WHEN APPLYING ACETONE AND WHILE DRYING (NOTE 6).

3 — IMPREGNATE EXTERIOR SURFACE ONLY WITH A SOLUTION OF SILICONE AS PER DWG 9279012, USING n-HEXANE AS THE SOLVENT, DWG 9279087, TO DEPOSIT 1.5 TO 3% BY WEIGHT OF SILICONE. ALTERNATE METHOD—IMPREGNATE EXTERIOR SURFACE ONLY WITH A SOLUTION OF ZONYL 6991 IN WATER (DWG 12997577) TO DEPOSIT .02 TO .08 GRAMS BY WEIGHT OF ZONYL 6991.

4 — CONTAINER ASSEMBLY WEIGHT (NOT INCLUDING CLOSURE) SHALL BE 2.55 ± .40 GRAMS. (WEIGHT TOLERANCE IS MORE RESTRICTIVE THAN DIMENSIONAL TOLERANCES)

5 — TO BE SHIPPED SEPARATELY.

6 — FILL ANY GAPS ALONG CONTAINER SEAM WITH NC ADHESIVE/SEALANT (DWG #12982966).

DISTRIBUTION STATEMENT D. AUTHORIZED TO THE DoD AND U.S. DoD CONTRACTORS ONLY; ADMINISTRATIVE OR OPERATIONAL USE; 02-11-23 OTHER REQUESTS SHALL BE REFERRED TO ARDEC, AMSTA-AR-FSA-R.

REVISIONS

SYM	DESCRIPTION	DATE	APPROVAL
A	ERR 7700046-1	77-01-24	RTV
B	NOR A7J2500	77-06-22	RTV HS
C	NOR A7J2501	77-06-30	RTV
D	NOR A7J2507	77-08-26	RTV
E	NOR A8T2500	78-01-27	RTV HS
F	NOR A8J2503 78-10-05	78-10-12	RTV
G	NOR A0K2509 80-04-16	80-04-28	RTV
H	NOR A1J2502 81-07-13	81-07-17	RTV
J	NOR A2Q2503 82-04-21	82-04-26	RTV
K	NOR A4J0002 840409 (ECP A4J0012 841003)	860829	RTV
L	NOR A2J0007/820825 (ECP M7J3013/870720)	880615	CHG 1 VZ
M	NOR M8J2088/881202	890413	
N	NOR R7J2063 971118	971216	RLV
P	NOR R1J2004 011019	011115	JB
R	NOR R2J5175 021015	021119	TPT

CURRENT DESIGN ACTIVITY CAGE CODE 19200
U.S. ARMY
ARMAMENT RESEARCH, DEVELOPMENT AND ENGINEERING CENTER
PICATINNY ARSENAL, NEW JERSEY 07806-5000

PART NO. 9312697

NEXT ASSY	USED ON
9312698	CHG, PROP, M204

APPLICATION

MECHANICAL PROPERTIES: YP, TS, EL2, RA, BH, RH

DO NOT SCALE DRAWING
UNLESS OTHERWISE SPECIFIED DIMENSIONS ARE IN INCHES
TOLERANCES ON DECIMALS ±
FRACTIONS ± ANGLES ±

ORIGINAL DATE OF DRAWING 28 JULY 1976
DRAFTSMAN RTV CHECKER
ENGR HS ENGR
ENGR ENGR
K Russell
D. K. J.

U.S. ARMY ARMAMENT COMMAND
PICATINNY ARSENAL, DOVER, NEW JERSEY 07801

CONTAINER ASSEMBLY (SLURRY)

SIZE D | CODE IDENT NO. 19203 | 9312697
SCALE 2/1 | UNIT WT. | SHEET

SARPA FORM 1041 Nov. 73

REVISIONS			
SYM	DESCRIPTION	DATE	APPROVAL
A	ERR 7700046-1	77-01-24	
B	NOR A7J2507	77-08-26	
C	NOR A8T2500	78-01-27	
D	NOR A8J2503 78-10-05	78-10-12	
E	NOR A0K2509 80-04-16	80-04-28	
F	NOR A1J2502 81-07-13	81-07-17	M
G	NOR A2Q2503 82-04-21	82-04-26	
H	NORA4J0002 840409 (ECPA4J0012 841603)	850829	
J	NOR R2J5175 021015	021119	TPT

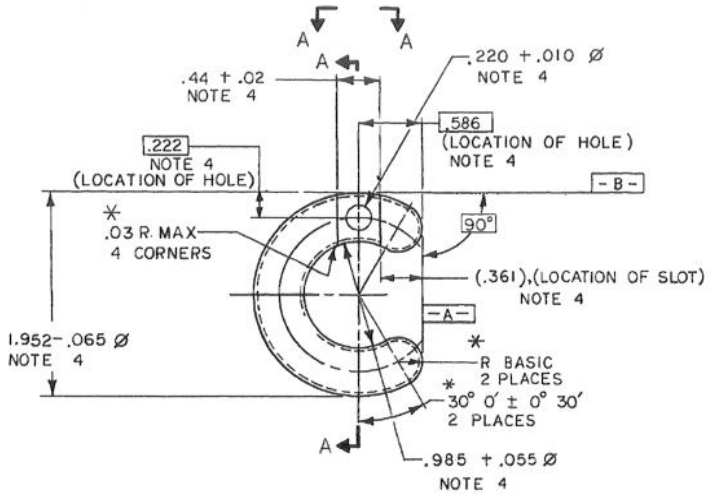

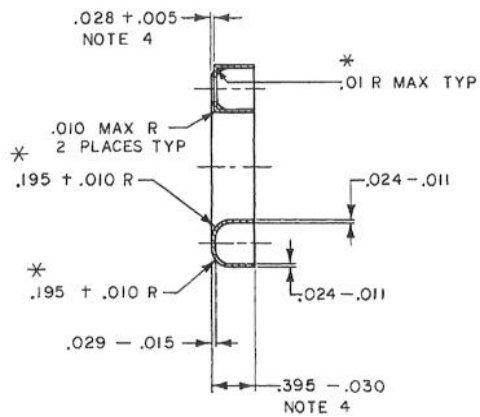

SECTION A-A

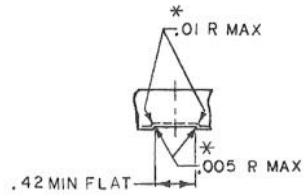

VIEW A-A

NOTES:—

1 - SPEC MIL - A - 2550 AND ANSI Y14.5-1973 APPLY.
2 - MATERIAL: - COMPOSITION, SEE DWG C9381562.
3 - DIMENSION(S) MARKED WITH ASTERISK(*) ARE FOR TOOL CONTROL AND NEED NOT BE GAGED.
4 - THIS DIMENSION IS AN ADVISORY DIMENSION PROVIDED THE DESIGN REQUIREMENTS ARE MET IN THE FINAL ASSEMBLY, SEE DWG D9312697.
5 - THE CONTAINER HALVES SHALL BE MADE BY A SLURRY, PULP MOLDING METHOD WHERE BY THE PARTS ARE FORMED DIRECTLY FROM THE SLURRY.

DISTRIBUTION STATEMENT D. AUTHORIZED TO THE DoD AND U.S. DoD CONTRACTORS ONLY; ADMINISTRATIVE OR OPERATIONAL USE; 02-11-23 OTHER REQUESTS SHALL BE REFERRED TO ARDEC, AMSTA-AR-FSA-R.

PART NO. 9312699 | FSCM NO. 19200

9312697	CHG, PROP, M204		
NEXT ASSY	USED ON		
APPLICATION			

MECHANICAL PROPERTIES: VP, TS, EL2, RA, BH, BN

DO NOT SCALE DRAWING
UNLESS OTHERWISE SPECIFIED DIMENSIONS ARE IN INCHES
TOLERANCES ON DECIMALS ± FRACTIONS ± ANGLES ±

ORIGINAL DATE OF DRAWING 28 JULY 1976
DRAFTSMAN / CHECKER / ENGR / ENGR / ENGR / ENGR

U.S. ARMY ARMAMENT RESEARCH AND DEVELOPMENT CENTER
DOVER, NEW JERSEY 07801

CONTAINER, TOP (SLURRY)

SIZE D | CODE IDENT NO. ~~19203~~ | 9312699
SCALE 2/1 | UNIT WT. | SHEET

SARPA FORM 1042 Rev. 73

REVISIONS			
SYM	DESCRIPTION	DATE	APPROVAL
A	ERR 7700046-1	77-01-24	
B	NOR A7J2507	77-08-26	
C	NOR A8J2503 78-10-05	78-10-12	
D	NOR A0K2509 80-04-16	80-04-28	
E	NOR A1J2502 81-07-13	81-07-17	
F	NOR A2Q2503 82-04-21	82-04-26	
G	NOR A4J0002 840409 (ECPA4J0012 841003	860829	
H	NOR M8J2088/881202	890413	
J	NOR R2J5175 021015	021119	TPT

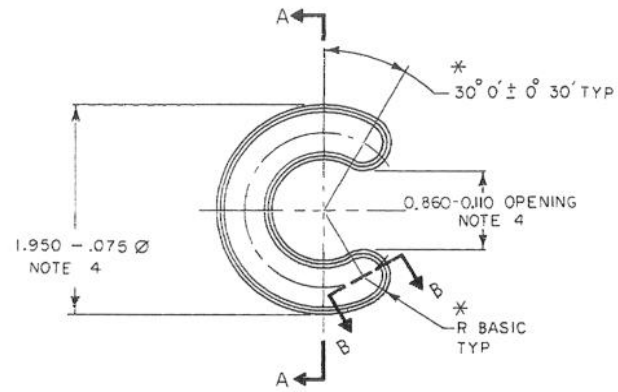

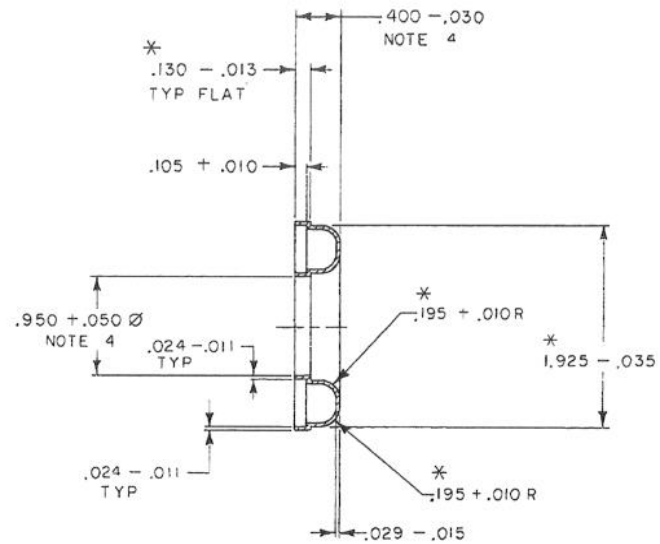

SECTION A - A

NOTES:-

1- SPEC MIL-A-2550 AND ANSI Y14.5-1973 APPLY.
2- MATERIAL:- COMPOSITION, SEE DWG C9381562.
3- DIMENSION(S) MARKED WITH ASTERISK(*) ARE FOR TOOL CONTROL AND NEED NOT BE GAGED.
4- THIS DIMENSION IS AN ADVISORY DIMENSION PROVIDED THE DESIGN REQUIREMENTS ARE MET IN THE FINAL ASSEMBLY, SEE DWG D9312697.
5- THE CONTAINER HALVES SHALL BE MADE BY A SLURRY, PULP MOLDING METHOD WHERE BY THE PARTS ARE FORMED DIRECTLY FROM THE SLURRY.

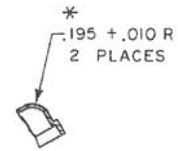

SECTION B-B

DISTRIBUTION STATEMENT D. AUTHORIZED TO THE DoD AND U.S. DoD CONTRACTORS ONLY; ADMINISTRATIVE OR OPERATIONAL USE; 02-11-23 OTHER REQUESTS SHALL BE REFERRED TO ARDEC, AMSTA-AR-FSA-R.

CURRENT DESIGN ACTIVITY CAGE CODE 19200
U.S. ARMY
ARMAMENT RESEARCH, DEVELOPMENT AND ENGINEERING CENTER
PICATINNY ARSENAL, NEW JERSEY 07806-5000

PART NO. 9312700

US ARMY ARMAMENT COMMAND
PICATINNY ARSENAL, DOVER, NEW JERSEY 07801

CONTAINER, BOTTOM (SLURRY)

NEXT ASSY	USED ON
9312697	CHG, PROP, M204

APPLICATION

MECHANICAL PROPERTIES: YP, TS, EL2, RA, BH, RH

DO NOT SCALE DRAWING
UNLESS OTHERWISE SPECIFIED DIMENSIONS ARE IN INCHES
TOLERANCES ON DECIMALS ±
FRACTIONS ± ANGLES ±

ORIGINAL DATE OF DRAWING 28 JULY 1976
DRAFTSMAN / CHECKER / ENGR / ENGR / ENGR / ENGR

SIZE	CODE IDENT NO.	
D	19203	9312700
SCALE 2/1	UNIT WT.	SHEET

REVISIONS				
ZONE	LTR	DESCRIPTION	DATE (YR-MO-DA)	APPROVED
	A	NOR M4J5004 940829	950614	RLV

NOTES:

1. APPLICABLE STANDARDS/SPECIFICATIONS
   A. DOD-STD-00100D(AR)
   B. ANSI Y14.5M-1982
   C. MIL-A-2550.

2. REQUIREMENTS: HEXANE
   TECHNICAL GRADE.

3. IDENTIFICATION OF THE "SUGGESTED SOURCE OF SUPPLY" HEREON IS NOT TO BE CONSTRUED AS A GUARANTEE OF PRESENT OR CONTINUED AVAILABILITY AS A SOURCE OF SUPPLY FOR THE ITEM.

4. ITEM IDENTIFICATION: RUBBER STAMP OR STENCIL THE FOLLOWING MARKING TO CONTAINER IN ACCORDANCE WITH MIL-STD-130.

"19200-12577657"

MFR-[ ]-[ ]

MANUFACTURER'S

CAGE CODE PART NO.

SUGGESTED SOURCE OF SUPPLY		
VENDOR		VENDOR PART NO.
ADDRESS	CAGE CODE	
J.T.BAKER CHEMICAL CO. 222 RED SCHOOL LANE, PHILLIPSBURG,N.J. 08865	70829	N169

LIMITED RIGHTS LEGEND
CONTRACT NO. DAAA21-88-C-0087
CONTRACTOR:MARTIN MARIETTA ORDNANCE SYSTEMS, INC.
SUBCONTRACTOR:SOLTAM LTD., HAIFA, ISRAEL
SUBCONTRACTOR:ISRAEL MILITARY INDUSTRIES LTD.(I.M.I.), ISRAEL
THE RESTRICTION GOVERNING THE USE OF TECHNICAL DATA MARKED WITH THIS LEGEND ARE SET FORTH IN THE DEFINITION OF "LIMITED RIGHTS" IN DFARS CLAUSE 52.227-7013. THIS LEGEND, TOGETHER WITH THE INDICATIONS OF THE PORTION OF THIS DATA, SHALL BE INCLUDED ON ANY REPRODUCTION HEREOF WHICH INCLUDES ANY PART OF THE PORTIONS SUBJECT TO LIMITED RIGHTS. THE LIMITED RIGHTS SHALL BE HONORED ONLY AS LONG AS THE DATA CONTINUES TO MEET THE DEFINITION OF LIMITED RIGHTS. THIS TECHNICAL DATA HOWEVER, MAY BE USED IN ACCORDANCE WITH LICENSE AGREEMENT NUMBER DAAA21-88-C-0213, WITH THE U.S. ARMY.

SPECIFICATION CONTROL DRAWING
METRIC PART NO.12577657

DISTRIBUTION STATEMENT D
DISTRIBUTION AUTHORIZED TO THE DEPARTMENT OF DEFENSE (DOD) AND DOD CONTRACTORS ONLY. THIS TECHNICAL DATA PACKAGE CONTAINS SENSITIVE TECHNOLOGY ON A NEW WEAPONS SYSTEM. THIS DETERMINATION WAS MADE ON 20 OCTOBER 1988. OTHER REQUESTS SHALL BE REFERRED TO COMMANDER, ARDEC, ATTN: SMCAR-FSS-DM, PICATINNY ARSENAL, NJ 07806-5000
DESTRUCTION NOTICE
FOR CLASSIFIED DOCUMENTS, FOLLOW PROCEDURES IN DOD 5200.22-M, INDUSTRIAL SECURITY MANUAL, SECTION II-19 OR DOD 5200.1-R, INFORMATION SECURITY PROGRAM REGULATION, CHAPTER IX. FOR UNCLASSIFIED, LIMITED DOCUMENTS, DESTROY BY ANY METHOD THAT WILL PREVENT DISCLOSURE OF CONTENTS OR RECONSTRUCTION OF THE DOCUMENT.

MECHANICAL PROPERTIES	
YP	
TS	
EL2	
RA	
BH	
RH	

12577568	M230
NEXT ASSY	USED ON
APPLICATION	

UNLESS OTHERWISE SPECIFIED DIMENSIONS ARE IN MM TOLERANCES ON
DIMENSIONS ANGLES

THIRD ANGLE PROJECTION

MATL ENGR

CONTRACT NUMBER DAAA21-88-C-0087
CONTRACTOR SOLTAM LTD.
ISRAEL MILITARY INDUSTRIES LTD.

DRAWN BY	DATE (YR-MO-DA)
M.L.	90-05-05
CHECKER	ENGINEER
M.C.	S.K.

DRAWING APPROVAL
DESIGN APPROVAL

DESIGN ACTIVITY
U.S. ARMY ARMAMENT RESEARCH, DEVELOPMENT AND ENGINEERING CENTER, PICATINNY ARSENAL, NEW JERSEY 07806-5000

HEXANE

C	CAGE CODE 19200	12577657
SCALE NONE	UNIT WT	SHEET

12577657-2

REVISIONS			
SYM	DESCRIPTION	DATE	APPROVAL
A	ERR 7500926-1	11-22-75	[illegible]
B	NOR R2J5175 021015	021119	TPT
C	NOR R3J2059 031112	031204	FET

NOTES:—

1 - INTERPRET DRAWING IN ACCORDANCE WITH STANDARDS PRESCRIBED BY MIL-STD-100

2 - REQUIREMENTS:

A - (NOT FOR USE IN VINYL FOAM)

3 - ONLY AN ITEM PROCURED FROM A VENDOR LISTED ON THIS DRAWING AND IDENTIFIED BY SUCH VENDOR'S IDENTIFYING NUMBER AS ALSO LISTED HEREON HAS BEEN TESTED AND APPROVED BY PICATINNY ARSENAL FOR USE IN (SILICONE). A SUBSTITUTE ITEM SHALL NOT BE USED WITHOUT PRIOR TESTING AND/OR APPROVAL BY PICATINNY ARSENAL.

4 - APPROVED SOURCE(S) OF SUPPLY:-

DOW CORNING CORPORATION
2200 W. SALZBURG RD.
MIDLAND, MICHIGAN, 48686
989-496-4000

SOURCE CONTROL DRAWING

PART NO. 9279012

DISTRIBUTION STATEMENT A

APPROVED FOR PUBLIC RELEASE; DISTRIBUTION IS UNLIMITED.

NEXT ASSY	USED ON
9277367	CHG PROP
9278773	M205

APPLICATION

MECHANICAL PROPERTIES: YP, TS, EL2, RA, BH, RH

DO NOT SCALE DRAWING
UNLESS OTHERWISE SPECIFIED DIMENSIONS ARE IN INCHES
TOLERANCES ON DECIMALS ±
FRACTIONS ± ANGLES ±

ORIGINAL DATE OF DRAWING: 1 DEC 1972

DRAFTSMAN: JP | CHECKER: [illegible]
ENGR | ENGR: [illegible]
ENGR | ENGR

K Russell
D. Katz

U.S. ARMY MUNITIONS COMMAND
PICATINNY ARSENAL, DOVER, NEW JERSEY 07801

SILICONE

SIZE: C | CODE IDENT NO.: 19203 | 9279012

SCALE ~ | UNIT WT. | SHEET

SMUPA 1060 MAY 68 REPLACES AMC 1051-4 R, 1 JAN 63 WHICH IS OBSOLETE

REVISIONS				
ZONE	LTR	DESCRIPTION	DATE (YR MO DA)	APPROVED
	—	PRODUCT BASELINE ERR R1J2035	010808	JB

NOTES:–

1– APPLICABLE STANDARDS/SPECIFICATIONS:–
   A– MIL–STD–100E

2– MATERIAL: ZONYL 6991

3– ONLY THE ITEM DESCRIBED ON THIS DRAWING WHEN PROCURED FROM THE VENDOR(S) LISTED HEREIN IS APPROVED BY ARDEC PICATINNY ARSENAL NEW JERSEY 07806–5000 FOR USE IN THE APPLICATIONS SPECIFIED HEREIN. A SUBSTITUTE ITEM SHALL NOT BE USED WITHOUT PRIOR APPROVAL BY ARDEC.

4– IDENTIFICATION OF THE APPROVED SOURCE(S) OF SUPPLY IS NOT TO BE CONSTRUED AS A GUARANTEE OF PRESENT OR CONTINUING AVAILABILITY AS A SOURCE OF SUPPLY FOR THE ITEM DESCRIBED ON THE DRAWING.

APPROVED SOURCE OF SUPPLY			
VENDOR			
PART NO.	ADDRESS	CAGE CODE	PART NO.
1297577	DuPONT 1007 MARKET STREET WILMINGTON, DE 19898	19200	ZONYL 6991

SOURCE CONTROL DRAWING

PART NO. 12997577

PMIC			
MECHANICAL PROPERTIES			
YP			
TS			
EL2			
RA			
BH			
RH			
	9312697	CHG PROP,M204	
	9278773	CHG PROP,M205	
	12977281	CHG PROP, M233/M234	
	NEXT ASSY	USED ON	
	APPLICATION		

DO NOT SCALE DRAWING

UNLESS OTHERWISE SPECIFIED DIMENSIONS ARE IN INCHES

TOLERANCES ON

DECIMAL	FRACTION
2 PL ±	±
3 PL ±	

THIRD ANGLE PROJECTION

MATL ENGR

CONTRACT NUMBER

CONTRACTOR

DRAWN BY	DATE(YR-MO-DA)
J BRENNAN	01–08–08
CHECKER	ENGINEER

DRAWING APPROVAL 01-08-13

DESIGN APPROVAL 01-08-13

DESIGN ACTIVITY U.S. ARMY
ARMAMENT RESEARCH, DEVELOPMENT AND ENGINEERING CENTER
PICATINNY ARSENAL, NEW JERSEY 07806-5000

WATERPROOFING AGENT

SIZE	CAGE CODE	
B	19200	12997577
SCALE	UNIT WT.	SHEET

SMCAR FORM 66, 1 MAR 88(TEMP) REPLACES SMCAR FORM 66, 1 JUL 87(TEMP)
WHICH MAY BE USED UNTIL EXHAUSTED

NOTE:-
1- APPLICABLE STANDARDS/SPECIFICATIONS:
A. MIL-STD-100E
B. MIL-A-2550

REVISIONS				
ZONE	LTR	DESCRIPTION	DATE (YR MO DA)	APPROVED
	-	PRODUCT BASELINE ERR R7J2063	971216	TPT/RLV
	A	NOR R9J3002 990915	991018	TPT
	B	NOR R2J5175 021015	021119	TPT
	C	NOR R3J2059 031112	031204	FET

COMPOSITION	SPEC	PERCENT BY WEIGHT
ACETONE	ASTM-D329	23 ± 1
ETHANOL	MIL-E-463	34 ± 1
METHYL ABIETATE	GOOD COMMERCIAL GRADE CAS 8050-15-5	7 ± 1
BUTYL ACETATE	ASTM-D303	23 ± 1
NITROCELLULOSE	MIL-DTL-244B	13 ± 1

DISTRIBUTION STATEMENT A
APPROVED FOR PUBLIC RELEASE;
DISTRIBUTION IS UNLIMITED.

FORMULATION DRAWING

PART NO. 12982966

PMIC		
12977281	M233	
	M234	
12577568	M230	
9278773	M205; M218; M219; M220	
9312697	M204	
	M235	
NEXT ASSY	USED ON	
APPLICATION		

MECHANICAL PROPERTIES	
YP	
TS	
EL2	
RA	
BH	
RH	

DO NOT SCALE DRAWING
UNLESS OTHERWISE SPECIFIED DIMENSIONS ARE IN INCHES
TOLERANCES ON
DECIMAL: 2 PL ±, 3 PL ±
FRACTION: ±

THIRD ANGLE PROJECTION

MATL ENGR

DRAWN BY: TPT
DATE(YR-MO-DA): 97-09-16
CHECKER
ENGINEER: CYM
DRAWING APPROVAL: Charles H. Manning
DESIGN APPROVAL: Patricia M. O'Reilly

DESIGN ACTIVITY U.S. ARMY
ARMAMENT RESEARCH, DEVELOPMENT AND ENGINEERING CENTER
PICATINNY ARSENAL, NEW JERSEY 07806-5000

NC ADHESIVE/SEALANT

SIZE	CAGE CODE	
B	19200	12982966
SCALE	UNIT WT.	SHEET

SMCAR FORM 66, 1 MAR 88(TEMP) REPLACES SMCAR FORM 66, 1 JUL 87(TEMP)
WHICH MAY BE USED UNTIL EXHAUSTED

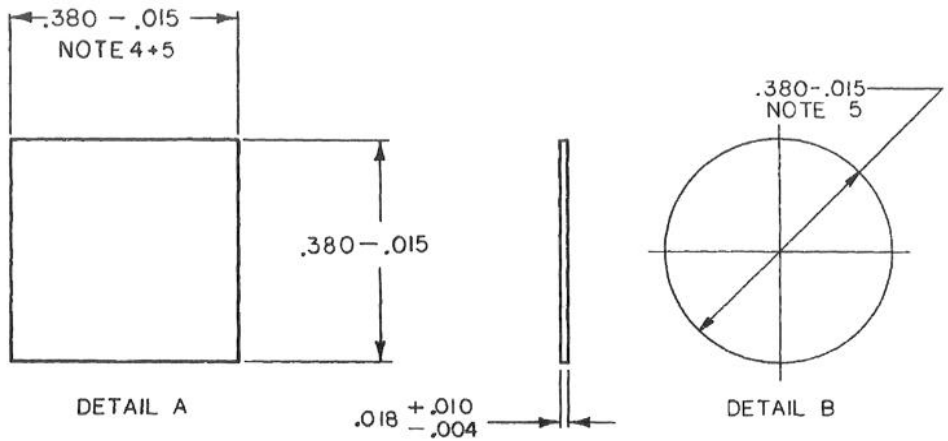

NOTES: –

1 – SPEC MIL – A – 2550, SPEC MIL – C – 48882, (M205 SLURRY), OR SPEC MIL-C-48868, (M204 SLURRY) OR SPEC MIL-C-70474, (M205 PAPER) AND ANSI Y14.5-1973 APPLY.

2 – MATERIAL: COMPOSITION SEE DWG C 9277371.

3 –

4 – CLOSURE MATERIAL SHALL BE CUT FROM UNSPLICED, CONTINUOS LENGTH STRIP OR SHEETS, TO THE REQUIRED SIZE AND SHAPE.

5 – ALTERNATE ASSEMBLY-SEE DETAIL B.

REVISIONS

SYM	DESCRIPTION	DATE	APPROVAL
—	ERR 7500926-1 (11-22-75)	09-21-76	RTV
A	NOR A7J2508	77-08-26	RTV
B	NOR A8T2501	78-01-27	RTV HS
C	NOR A8J2004 78-10-30	79-01-19	RTV
D	NOR A1J0009 81-08-31	81-10-07	RTV
E	NOR A3J2014 83-12-02	86-08-08	RTV
F	NOR A4J0002 840409 ECP A4J0012 841003	860829	
G	NOR A4J0009/841003 (ECP M8J2035/880321)	900126	ORFI JB
H	NOR MOJ3033/900928	920305	RV SR.
J	NOR R0J3005/000608	000714	BAC
K	NOR R2J5175 021015	021119	TPT
L	NOR R3J2059/031112	031204	FET
M	NOR R2J2034 021219	040311	KMC

U.S. ARMY
ARMAMENT RESEARCH, DEVELOPMENT AND ENGINEERING CENTER
PICATINNY ARSENAL, NEW JERSEY 07806-5000

PART NO. 9312786

DISTRIBUTION STATEMENT A
APPROVED FOR PUBLIC RELEASE; DISTRIBUTION IS UNLIMITED.

NEXT ASSY	USED ON
9300234	CHG,PROP,M218
9378134	CHG,PROP,M219
9381510	CHG,PROP,M220
9312697	CHG,PROP, M204
9381565	CHG, PROP, M205

APPLICATION

MECHANICAL PROPERTIES: YP, TS, EL2, RA, BH, RH

DO NOT SCALE DRAWING
UNLESS OTHERWISE SPECIFIED DIMENSIONS ARE IN INCHES
TOLERANCES ON DECIMALS ±
FRACTIONS ± ANGLES ±

ORIGINAL DATE OF DRAWING 76-9-21
DRAFTSMAN RTV CHECKER
ENGR HS ENGR
ENGR ENGR
K Powell
D. Katz

US ARMY ARMAMENT COMMAND
PICATINNY ARSENAL, DOVER, NEW JERSEY 07801

CLOSURE

SIZE C | CODE IDENT NO. 19203 | 9312786
SCALE 8 / 1 | UNIT WT. | SHEET

BARPA FORM 1040 OCT 73 EDITION OF MAY 64, MAY BE USED

(DRAWING SIZE C
ARRADCOMR 70-12)

REVISIONS			
SYM	DESCRIPTION	DATE	APPROVAL

REVISIONS			
SYM	DESCRIPTION	DATE	APPROVAL
—	PRODUCTION RELEASE ERR A4A2506	84-05-11	RW
A	NOR A4J0002 840409 (ECP A4J0012 841003)	860329	RW
B	NOR M3J3045 940110	940413	PT
C	NOR M4J3022 940713	940803	RV
D	NOR M5J3089 960111	960216	JB
E	NOR M6J2075 961023	961215	JB
F	NOR R7J2048 970821	970929	JB
G	NOR R8J2046 980706	980813	RLV
H	NOR R1J2081 020108	020307	TPT
J	NOR R2J5175 021015	021119	TPT
L	NOR R3J2059 031112	031204	FET
M	NOR R05J3011 060306	060504	TPT

NOTES:—

1 - SPEC MIL-A-2550 AND SPEC MIL-P-70475 APPLIES.

2 - MATERIAL:- COMPOSITION - RECOMMENDED

	PERCENT BY WEIGHT
A - NITROCELLULOSE, GRADE B, MIL-DTL-244B	78.00 ± 3.00%
B - ETHYL CENTRALITE, SPEC MIL-E-255A	1.90 ± 0.60%
C - RESIN AND ADDITIVES:- RESIN 9247365-1 OR 9247365-2 OR 9247365-3	7.00 (NOTE 4)
ADDITIVE 9247368-1 OR 9247368-2	
D - FIBER:- KRAFT, CID A-A-59225	3.75 (NOTE 4)
ACRYLIC, FIBRILLATED (SEE DRAWING B9235668)	3.75 ± 1.00%
POLYESTER, STAPLE FIBER SEE DRAWING NO. 9279014	5.60 (NOTE 4)

3 - MATERIAL:- COMPOSITION - ALTERNATIVE

A - NITROCELLULOSE, GRADE B, MIL-DTL-244B	78.00 ± 3.0%
B - DIPHENYLAMINE, SPEC MIL-D-98	1.00 ± 0.3%
C - RESIN AND ADDITIVES:- RESIN 9247365-1 OR 9247365-2 OR 9247365-3	7.00 (NOTE 4)
ADDITIVE 9247368-1 OR 9247368-2	
D - FIBER:- KRAFT, CID A-A-59225	3.75 (NOTE 4)
ACRYLIC, FIBRILLATED (SEE DRAWING B9235668)	3.75 ± 1.0%
POLYESTER, STAPLE FIBER SEE DRAWING NO. 9279014	6.50 (NOTE 4)

4 - WEIGHT PERCENT OF COMPOSITION IS ADVISORY.

CURRENT DESIGN ACTIVITY CAGE CODE 19200
U.S. ARMY
ARMAMENT RESEARCH, DEVELOPMENT AND ENGINEERING CENTER
PICATINNY ARSENAL, NEW JERSEY 07806-5000

SEE SEPARATE PARTS LIST 9381562

PART NO. 9381562

9312700	
9312699	
9345312	CHG, PROP, M204
9345313	
9278774	CHG, PROP, M205
9278775	
NEXT ASSY	USED ON
APPLICATION	

MECHANICAL PROPERTIES: YP, TS, EL2, RA, BH, RH

DO NOT SCALE DRAWING
UNLESS OTHERWISE SPECIFIED DIMENSIONS ARE IN INCHES
TOLERANCES ON DECIMALS ±
FRACTIONS ± ANGLES ±

ORIGINAL DATE OF DRAWING 84 — 05 — 11
DRAFTSMAN RW CHECKER
ENGR ENGR
ENGR ENGR

U.S. ARMY ARMAMENT RESEARCH AND DEVELOPMENT CENTER
DOVER, NEW JERSEY 07801

COMPOSITION

SIZE C CAGE CODE 19200 9381562
SCALE NONE UNIT WT. SHEET

DISTRIBUTION STATEMENT A
APPROVED FOR PUBLIC RELEASE; DISTRIBUTION IS UNLIMITED.

ARRADCOM FORM 67 AUG 77 REPLACES SARPA FORM 1040 OCT 73 WHICH MAY BE USED UNTIL EXHAUSTED