DRAWING SIZE C

ZONE	LTR	DESCRIPTION	DATE (YR MO DA)	APPROVED
	–	PRODUCT BASELINE ERR R05Q2043	060126	HJS

NOTES:

1. APPLICABLE STANDARDS/SPECIFICATIONS:
   A. MIL-STD-100E
   B. ASME Y14.5M-1994
   C. MIL-A-2550
   D. DTL 9294752 / MIL-C-48396
2. MATERIAL: ALUMINUM ALLOY, 2024-T4, ASTM B211, OR B221.
3. SURFACE FINISH: 125 EXCEPT AS NOTED.
4. PROTECTIVE FINISH: FINISH NO. 7.3.1 OF MIL-STD-171, CHEMICAL FILM, CHROMATE.

(5) NO BURRS DEPRESSIONS OR CUT-OFF NIBS PERMITTED.

(6) VERIFY DIMENSION PRIOR TO PRODUCTION RUN.

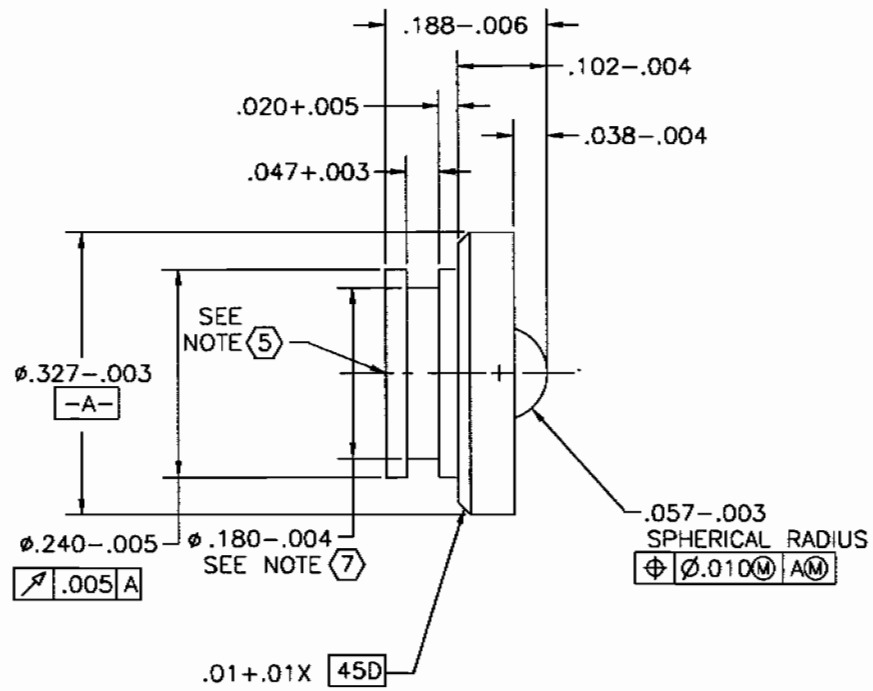

DISTRIBUTION STATEMENT D.
DISTRIBUTION AUTHORIZED TO THE DEPARTMENT OF DEFENSE (DOD) AND DOD CONTRACTORS ONLY. THIS TECHNICAL DATA PACKAGE PROTECTS PROPRIETARY RIGHTS INFORMATION AND TECHNICAL DATA THAT ADVANCE CURRENT TECHNOLOGY OR DESCRIBE NEW TECHNOLOGY IN AN AREA OF SIGNIFICANT, OR POTENTIALLY SIGNIFICANT MILITARY APPLICATION. THIS DETERMINATION WAS MADE ON 23 MAY 96.
OTHER REQUESTS SHALL BE REFERRED TO COMMANDER, RDECOM-ARDEC, ATTN: AMSRD-AAR-QEM-C, PICATINNY ARSENAL, NEW JERSEY 07806-5000.

PART NO. 13000797

PMIC			DO NOT SCALE DRAWING	CONTRACT NUMBER
			UNLESS OTHERWISE SPECIFIED DIMENSIONS ARE IN INCHES TOLERANCES ON DECIMAL 2 PL ± 3 PL ± FRACTION ±	CONTRACTOR
MECHANICAL PROPERTIES				DRAWN BY HJS DATE(YR-MO-DA) 060126
YP			THIRD ANGLE PROJECTION	CHECKER ENGINEER CT
TS				DRAWING APPROVAL
EL2				
RA				
BH	13012620	CTG IGN M752A1	MATL ENGR	DESIGN APPROVAL
RH	NEXT ASSY	USED ON		
	APPLICATION			

DESIGN ACTIVITY U.S. ARMY
ARMAMENT RESEARCH, DEVELOPMENT AND ENGINEERING CENTER
PICATINNY ARSENAL, NEW JERSEY 07806-5000

PLUG, FIRING
M752A1

SIZE	CAGE CODE	
C	19200	13000797
SCALE 10/1	UNIT WT.	SHEET

SMCAR FORM 67, 1 DEC 87(TEMP), REPLACES SMCAR FORM 67, 1 MAR 87(TEMP), WHICH MAY BE USED UNTIL EXHAUSTED

DRAWING SIZE C

ZONE	LTR	DESCRIPTION	DATE (YR MO DA)	APPROVED
	–	PRODUCT BASELINE ERR R05Q2043	060126	HJS

NOTES:

1. APPLICABLE STANDARDS/SPECIFICATIONS:
   A. MIL-STD-100E
   B. ASME Y14.5M-1994
   C. MIL-A-2550
   D. DTL 9294752 / MIL-C-48396

2. MATERIAL: SILICONE, 7GE, 707, A19, B37, E016, E036, F-19, G11 AND EA14 ASTM D2000.

3. APPROVED SOURCE OF SUPPLY:
   APPLE RUBBER PRODUCTS INC.
   310 ERIE STREET
   LANCASTER, N.Y. 14086
   SIZE: .158 X .043

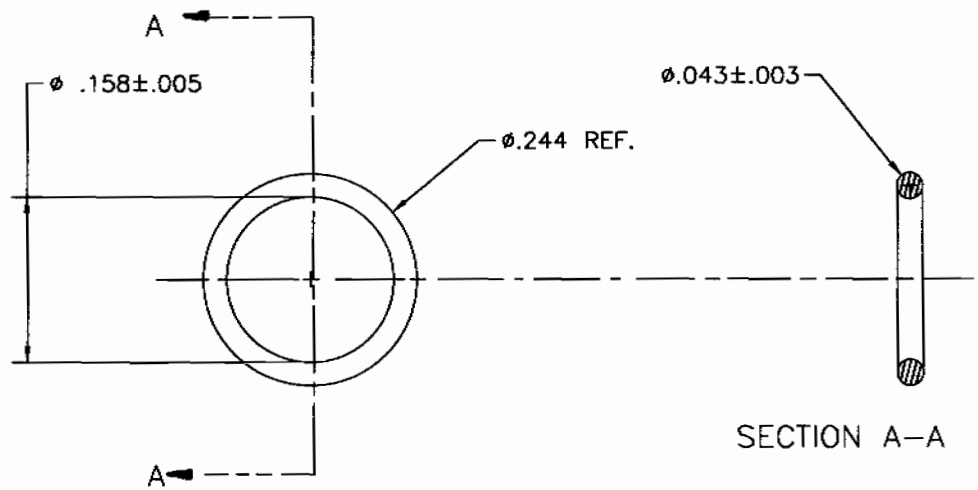

DISTRIBUTION STATEMENT D.
DISTRIBUTION AUTHORIZED TO THE DEPARTMENT OF DEFENSE (DOD) AND DOD CONTRACTORS ONLY. THIS TECHNICAL DATA PACKAGE PROTECTS PROPRIETARY RIGHTS INFORMATION AND TECHNICAL DATA THAT ADVANCE CURRENT TECHNOLOGY OR DESCRIBE NEW TECHNOLOGY IN AN AREA OF SIGNIFICANT, OR POTENTIALLY SIGNIFICANT MILITARY APPLICATION. THIS DETERMINATION WAS MADE ON 23 MAY 96.
OTHER REQUESTS SHALL BE REFERRED TO COMMANDER, RDECOM-ARDEC, ATTN: AMSRD-AAR-QEM-C, PICATINNY ARSENAL, NEW JERSEY 07806-5000.

PART NO. 13000746

PMIC			DO NOT SCALE DRAWING UNLESS OTHERWISE SPECIFIED DIMENSIONS ARE IN INCHES TOLERANCES ON DECIMAL FRACTION 2 PL ± ± 3 PL ±
MECHANICAL PROPERTIES			THIRD ANGLE PROJECTION
YP			
TS			
EL2			
RA			
BH	13012620	CTG IGM M752A1	
RH	NEXT ASSY	USED ON	MATL ENGR
	APPLICATION		

CONTRACT NUMBER
CONTRACTOR
DRAWN BY HJS DATE(YR-MO-DA) 060126
CHECKER ENGINEER CT
DRAWING APPROVAL
DESIGN APPROVAL

DESIGN ACTIVITY U.S. ARMY
ARMAMENT RESEARCH, DEVELOPMENT AND ENGINEERING CENTER
PICATINNY ARSENAL, NEW JERSEY 07806-5000

O-RING PLUG, FIRING

SIZE C | CAGE CODE 19200 | 13000746
SCALE 10/1 | UNIT WT. | SHEET

SMCAR FORM 67, 1 DEC 87(TEMP), REPLACES SMCAR FORM 67, 1 MAR 87(TEMP), WHICH MAY BE USED UNTIL EXHAUSTED