DRAWING SIZE C

REVISIONS			
ZONE	LTR	DESCRIPTION	DATE (YR MO DA)	APPROVED
	G	REDRAWN WITH CHANGE NOR A5B3000 850208 (ECP A6B2010 861117)	90-07-06	

NOTES:-

1-SPEC MIL-A-2550 AND ANSI Y14.5-1973 APPLY.
2-WIRE, ELECTRICAL (UNINSULATED) TYPE S, AWG 21 (.028) SOFT TEMPER, SPEC QQ-W-343, APPROX 50 FT LONG. NOTE 5.
3-WIRE SHALL BE PAINTED BEFORE COILING WITH COATING, OBLITERATING, TYPE II, SPEC TT-C-2114, COLOR SIMILAR TO OLIVE DRAB NO. 34087, FED-STD-595. WIRE SHALL BE COILED ON CABLE REEL TO FROM TWO CONTINUOUS LAYERS. EACH LAYER SHALL BE SECURED WITH A COAT OF THE SAME COATING, OBLITERATING.
4-THE LOOSE END SHALL BE BENT AT A RIGHT ANGLE ACROSS THE FACE OF THE COILED WIRE.
5-ALTERNATE MATERIAL-WIRE, TRIP PER DWG. A7548177. 50 FT. LONG.
6-TAPE PACKAGING, WATERPROOF, SPEC PPP-T-60 TYPE IV CLASS 1 BLACK, 1/2 INCH WIDE, LENGTH AS REQUIRED, MAY BE USED TO SECURE WIRE TO REEL AT STARTING AND CUT-OFF END.
7-CLIP RETAINING MAY BE USED TO SECURE WIRE TO REEL AT STARTING AND CUT-OFF END. REFER TO SHEET 2 FOR ALTERNATE ASSEMBLY.

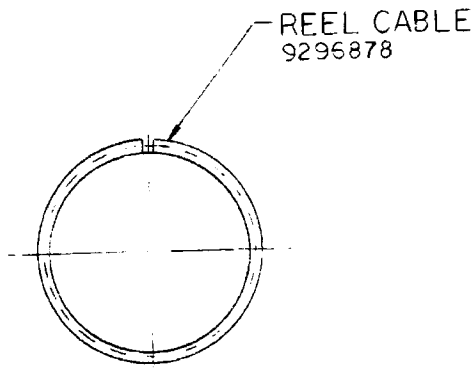

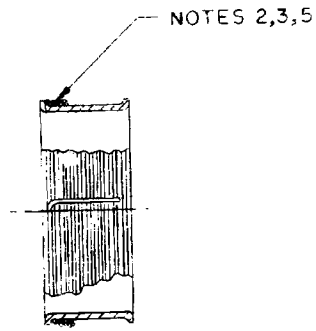

G	G
SHEET 2	SHEET 1
REVISION STATUS OF SHEETS	

CURRENT DESIGN ACTIVITY CAGE CODE 19200
U.S. ARMY
ARMAMENT RESEARCH, DEVELOPMENT AND ENGINEERING CENTER
PICATINNY ARSENAL, NEW JERSEY 07806-5000

SEE SEPARATE PARTS 9296867

PART NO. 9296867

PMIC		
MECHANICAL PROPERTIES		
YP		
TS		
EL2		
RA		
BH		
RH		
	9296865	FIRING DEVICE DEMO M142
	NEXT ASSY	USED ON
	APPLICATION	

DO NOT SCALE DRAWING
UNLESS OTHERWISE SPECIFIED DIMENSIONS ARE IN INCHES
TOLERANCES ON DECIMAL FRACTION
2 PL ± ±
3 PL ±
THIRD ANGLE PROJECTION
MATL ENGR

CONTRACT NUMBER
CONTRACTOR
DRAWN BY F.G. DATE (YR-MO-DA) 76-09-13
CHECKER J.H. ENGINEER J.S.
DRAWING APPROVAL TERENCE CLIFFORD
DESIGN APPROVAL A.L. BERMAN

PICATINNY ARSENAL, DOVER, N.J.

CABLE REEL ASSEMBLY

SIZE C CAGE CODE 19203 9296867
SCALE UNIT WT. SHEET OF 2

SMCAR FORM 67, 1 DEC 87(TEMP), REPLACES SMCAR FORM 67, 1 MAR 87(TEMP), WHICH MAY BE USED UNTIL EXHAUSTED

(Atch 18)