DRAWING SIZE C
(ARRADCOMM 70-12)

REVISIONS			
SYM	DESCRIPTION	DATE	APPROVAL
A	NORA9B2524/79-09-27	79-10-10	
B	NORA0B2503/80-05-10	80-07-30	
C	NORA0B2507/80-10-03	80-10-10	
D	NORA2A2029 82-09-02	83-01-14	
E	NORA3B2008 83-07-19	840309	
F	NOR R8B2001 980309	980407	HJS

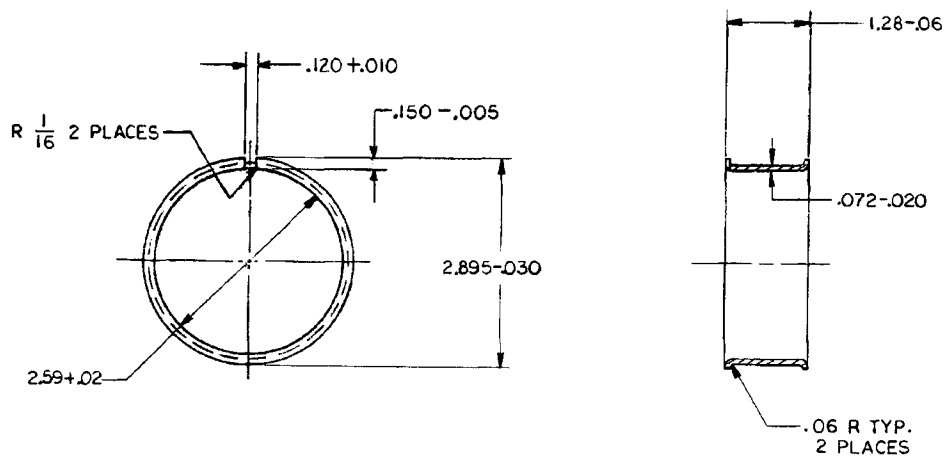

NOTES:

1 - SPEC MIL-A-2550 AND Y14.5-1973 APPLY.

2 - MATERIAL: PAPER, KRAFT, TYPE I, GRADE A, SPEC UU-P-268. ADHESIVE, WATER-RESISTANT, SPEC MMM-A-260. NOTE 4

3 - PROTECTIVE FINISH: COATING, OBLITERATING, TYPE II, SPEC TT-C-2114, COLOR SIMILAR TO OLIVE DRAB NO 34087, FED STD 595.

4 - ALTERNATE MATERIAL: PLASTIC, INJECTION MOLDING, POLYSTYRENE, HIGH IMPACT STRENGTH, NATURAL POLYMER PER ASTM D4549 PS231. COLOR OLIVE DRAB SIMILAR TO NO. 34087, FED-STD-595.

ORIGINAL DESIGN ACTIVITY FSCM NO. 19203

PART NO. 9296878

9296865	FIRING DEVICE DEMO M142	
NEXT ASSY	USED ON	
APPLICATION		

MECHANICAL PROPERTIES: YP, TS, EL2, RA, SH, RH

DO NOT SCALE DRAWING
UNLESS OTHERWISE SPECIFIED
DIMENSIONS ARE IN INCHES
TOLERANCES ON DECIMALS ±
FRACTIONS ± ANGLES ±

ORIGINAL DATE OF DRAWING 13 SEPT 1976

DRAFTSMAN FG | CHECKER JH
ENGR CHH | ENGR
ENGR | ENGR

T. CLIFFORD
A. BERMAN

U S ARMY ARMAMENT RESEARCH AND DEVELOPMENT CENTER
DOVER, NEW JERSEY 07801

REEL, CABLE

SIZE C | FSCM NO. 19200 | 9296878
SCALE 1/1 | UNIT WT. | SHEET

ARRADCOM FORM 67 AUG 77 REPLACES SARPA FORM 1040 OCT 75 WHICH MAY BE USED UNTIL EXHAUSTED

(Atch 18)