SES-700700A
CAGE CODE 81996
29 August 2002
SUPERCEDING
SES 700700
15 June 1997

DETAIL SPECIFICATION

SYSTEM SPECIFICATION

FOR THE

UH-60L BLACK HAWK UTILITY HELICOPTER

Prepared by

SIKORSKY AIRCRAFT CORP

A United Technologies Company
Stratford, Connecticut 06601
CAGE CODE 78286

Prepared Under Contract DAAJ09-97-C-0005

U.S ARMY AVIATION and MISSILE COMMAND
Redstone Arsenal, Alabama 35898-5254

DISTRIBUTION STATEMENT D : Distribution authorized to Department of Defense and DOD contractors only due to Critical Technology effective as of 28 April 2000.

Sikorsky
A United Technologies Company

TITLE	AIRCRAFT SPECIFICATION FOR THE UH–60L BLACK HAWK HELICOPTER LOT XXI TO LOT XXV
DOCUMENT NUMBER	SES–700700
PREPARED UNDER	DAAJ09–97–C–0005
DOCUMENT DATE	15 JUNE 1997
PERIOD COVERED	01 July 1997 – 30 June 2002

THIS DOCUMENT IS APPLICABLE TO THE FOLLOWING AIRCRAFT MODEL (S):

UH–60L BLACK HAWK

PREPARED BY: J. C. DEFRANCO

CONTRACT SPECIFICATION: S. T. MORGAN

CHECKED BY: A. F. GUGLIELMO

APPROVED BY: J. BROWN

REV.	CHANGED BY	REVISED PAGE(S)	ADDED PAGE(S)	DELETED PAGE(S)	DESCRIPTION	DATE	APPROVAL
1	RAF/LB	iv, vii, xiv, xv, xvii, 1–3, 5, 8–15, 17–18, 26–42, 60–65, 71–72, 86, 105–107, 115, 130, 133, 143, 145, 147–148, 150,			Incorporation of SCNs 1–3, 5–12R1 for Lot XXVI– Lot XXX.	8/29/02	RAF

REVISIONS CONTINUED ON NEXT PAGE.

REVISIONS

REV.	CHANGED BY	REVISED PAGE(S)	ADDED PAGE(S)	DELETED PAGE(S)	DESCRIPTION	DATE	APPROVAL
1	RAF/LB	152, 155, 159, 161 – 162, 164, 168, 169, 172, III – 3, III – 4, III – 5	168a		(Continued)	8/29/02	

REVISIONS CONTINUED ON NEXT PAGE.

THIS PAGE INTENTIONALLY LEFT BLANK

TABLE OF CONTENTS

Paragraph	Title	Page
1.	SCOPE	1
1.1	Scope	1
1.2	Compliance	1
2.	APPLICABLE DOCUMENTS	1
2.1	Documents	1
2.1.1	Specifications	2
2.1.1.1	Military Specifications	2
2.1.1.2	Other Government Activity	3
2.1.2	Standards	3
2.1.2.1	Federal Standards	3
2.1.2.2	Military Standards	3
2.1.3	Other Government Documents	4
2.1.4	Avionics Specifications	4
2.2	Non–Government Documents	5
2.2.1	Industry Standards	5
2.2.2	Sikorsky Documents	5
2.2.3	Other Contractor Documents	6
3.	REQUIREMENTS	7
3.1	Item Definition	7
3.1.1	General Description	7
3.1.1.1	Item Drawings	7
3.1.1.2	Interface Definition	7
3.1.2	Missions	7
3.1.3	Major Subsystem/Component List	7
3.1.4	Government Furnished Property List	7
3.1.5	Government Developed Engineering Changes	15
3.1.6	Operational and Organizational Concepts	15
3.1.6.1	Operational Concepts	15
3.1.6.1.1	Operating Conditions.	15
3.1.6.1.2	Operations to Enhance Survivability	16
3.1.6.1.3	Areas of Operation	16
3.1.6.1.4	Climatic Conditions	16
3.1.6.2	Organizational Concepts	16
3.1.6.2.1	Flight Crew	16

TABLE OF CONTENTS (Cont'd)

Paragraph	Title	Page
3.2	Characteristics	16
3.2.1	Performance Characteristics	16
3.2.1.1	Aerial Vehicle	16
3.2.1.1.1	Performance Ground Rules	16
3.2.1.1.1.1	Primary Mission	17
3.2.1.1.1.2	Alternate Endurance	18
3.2.1.1.1.3	One Engine Inoperative Performance	18
3.2.1.1.1.4	Performance Curves	19
3.2.1.1.1.5	Maneuverability	19
3.2.1.1.2	Aerodynamics	19
3.2.1.1.3	Vibration and Dynamics	56
3.2.1.1.3.1	Vibration	56
3.2.1.1.3.2	Dynamics	58
3.2.1.1.4	Flight Controls	58
3.2.1.1.4.1	Design Considerations	58
3.2.1.1.4.2	Flying Qualities	58
3.2.1.1.5	Propulsion Subsystem Characteristics	58
3.2.1.1.6	Built In Test Equipment (BITE)	58
3.2.1.2	Deployment	59
3.2.1.2.1	Loading Criteria	59
3.2.1.2.2	Landing Platform Helicopter (LPH) Carriers	59
3.2.2	Physical Characteristics	59
3.2.2.1	Weights	59
3.2.2.1.1	Weight and Balance Classification	59
3.2.2.1.2	Weight Empty	59
3.2.2.1.3	Operating Weight	61
3.2.2.1.4	Useful Load	61
3.2.2.1.4.1	Crew	61
3.2.2.1.5	Primary Mission Gross Weight	61
3.2.2.1.6	Maximum Alternate Gross Weight	62
3.2.2.1.7	Unit Weights	62
3.2.2.1.8	Center of Gravity	62
3.2.2.1.8.1	Longitudinal Center of Gravity Limits	62
3.2.2.1.8.2	Lateral Center of Gravity Limits	62
3.2.2.2	Dimensions and General Data	63
3.2.2.3	Storage	64

TABLE OF CONTENTS (Cont'd)

Paragraph	Title	Page
3.2.2.4	Structural Design Criteria	64
3.2.2.4.1	Strength Requirements	64
3.2.2.4.1.1	Basic Structural Design Weight	64
3.2.2.4.1.2	Floor Loading	65
3.2.2.4.1.3	Engine Mounts and Inlets	65
3.2.2.4.1.4	Landing and Ground Loads	65
3.2.2.4.1.5	Cargo Tiedown Rings/Studs	66
3.2.2.4.1.6	Pushover Maneuver	66
3.2.2.4.1.7	Gusts	66
3.2.2.4.1.8	Yield Factor of Safety	66
3.2.2.4.1.9	Cargo Doors	66
3.2.2.4.1.10	Tail Rotor Loss	66
3.2.2.4.1.11	Store Hardpoints	66
3.2.2.4.1.12	Repairability	67
3.2.2.4.2	Fatigue	67
3.2.2.4.2.1	"Fail−Safe" Principles	67
3.2.2.4.3	Damage Tolerance	68
3.2.2.4.3.1	Damage Tolerance − Primary Airframe Structure	68
3.2.2.4.3.2	Damage Tolerance − Flight Essential Components	68
3.2.2.4.4	Airframe Crashworthiness	69
3.2.2.4.4.1	Load Factors	69
3.2.2.4.4.2	Longitudinal Impact	69
3.2.2.4.4.3	Vertical and Lateral Impact	69
3.2.2.4.4.4	Turnover Structure	69
3.2.2.4.4.5	Nose Plowing	70
3.2.2.4.4.6	Fuselage	70
3.2.2.4.4.7	Tail Landing Gear	70
3.2.2.4.4.8	Blade Strikes	70
3.2.2.4.4.9	Wire Strikes	70
3.2.3	Reliability	71
3.2.3.1	Mission Reliability	77
3.2.3.2	Flight Safety Reliability	77
3.2.3.3	Aircraft Mean−Time−Between−Failure (MTBF)	77
3.2.3.4	Major Component Removals	78
3.2.3.4.1	Mean−Time−Between−Removal (MTBR)	79
3.2.3.5	Reliability After Storage	80

TABLE OF CONTENTS (Cont'd)

Paragraph	Title	Page
3.2.4	Maintainability	80
3.2.4.1	Not used	80
3.2.4.2	Mean Time To Repair	81
3.2.4.3	Mean Time Between Maintenance	81
3.2.4.4	Corrective Maintenance Manhours to Flight Hour Ratio	81
3.2.4.5	Inspection and Servicing Maintenance Manhour to Flight−Hour	81
3.2.4.6	Turn Around Time	81
3.2.4.6.1	Replenishment of Expendables and Operational Checks	81
3.2.4.6.2	Armament Subsystem Loading and Servicing	82
3.2.4.7	Mission Configuration Change Requirements	82
3.2.4.7.1	Armament	82
3.2.4.7.2	Aeromedical	82
3.2.4.7.3	Troop Seats	82
3.2.4.8	Not used	82
3.2.4.9	Qualitative Maintainability Requirements	82
3.2.5	Environmental Conditions	83
3.2.5.1	Natural Environment	83
3.2.5.1.1	Operating Environment	83
3.2.5.1.1.1	Temperature	83
3.2.5.1.1.2	Relative Humidity	84
3.2.5.1.1.3	Rain	84
3.2.5.1.1.4	Sand	85
3.2.5.1.1.5	Snow	85
3.2.5.1.1.6	Ice Conditions	85
3.2.5.1.1.7	Salt Spray	85
3.2.5.1.1.8	Fungus	86
3.2.5.1.1.9	Sunshine	86
3.2.5.2	Induced Environment	86
3.2.5.2.1	Not used	86
3.2.5.2.2	Nuclear Weapons	86
3.2.6	Transportability	86
3.2.7	Availability	86
3.2.7.1	Inherent Availability	86
3.2.7.2	Achieved Availability	86
3.2.8	Not used	87
3.2.9	Not used	87

TABLE OF CONTENTS (Cont'd)

Paragraph	Title	Page
3.2.10	Survivability and Vulnerability	87
3.2.10.1	Threat	87
3.2.10.2	Protection	87
3.2.10.3	External Noise Signature	87
3.2.10.4	Infrared (IR) Suppression Requirements	88
3.2.10.4.1	Hover IR Engine Compartment Cooling	88
3.2.10.4.2	Hover IR Miscellaneous Compatibility Requirements	88
3.2.10.5	Not used	88
3.2.10.6	Not used	88
3.2.10.7	Thermal Effects	88
3.2.11	Useful Lives	89
3.2.11.1	Fatigue Life	89
3.2.11.2	Mean-Time-Between-Removal	93
3.2.11.3	Airframe Major Overhaul	93
3.2.12	Internal Noise Levels	93
3.3	Design and Construction	94
3.3.1	Materials, Processes and Parts	94
3.3.2	Electromagnetic Radiation	94
3.3.2.1	Electromagnetic Radiation Compatibility	94
3.3.2.2	Electromagnetic Vulnerability	94
3.3.2.3	Electromagnetic Interference	94
3.3.2.4	Static Electricity	96
3.3.2.5	Electrical Bonding/Grounding	96
3.3.2.6	Hazards of Electromagnetic Radiation to Ordnance (HERO)	96
3.3.3	Nameplates, Product Marking and Finish	100
3.3.3.1	Nameplates and Product Marking	100
3.3.3.1.1	Identification and Modification Plates	100
3.3.3.1.2	Aircraft Nameplate	100
3.3.3.2	Finish	100
3.3.3.2.1	Exterior Color	100
3.3.3.2.2	Interior Color	100
3.3.3.2.3	Insignia and Marking	100
3.3.4	Interchangeability and Replaceabiliity	100
3.3.5	Lightning Protection	100
3.4	Not used	100
3.5	Not used	100
3.6	Not used	100

TABLE OF CONTENTS (Cont'd)

Paragraph	Title	Page
3.7	Functional Area Characteristics	101
3.7.1	Main Rotor Group	101
3.7.1.1	Description and Components	101
3.7.1.2	Blade Construction	101
3.7.1.3	Blade Retention	101
3.7.1.4	Rotor Head	101
3.7.1.5	Rotor Controls	101
3.7.1.6	Vibration Absorber	102
3.7.1.7	Blade Restrainers	102
3.7.1.8	Blade Folding	102
3.7.1.9	Blade Securing	102
3.7.1.10	Blade Balancing and Blade Tracking	102
3.7.1.11	Blade Erosion Protection Strip	102
3.7.1.12	Rotor Brake	102
3.7.1.13	Mechanical Gust Lock	102
3.7.1.14	Rotor Tachometer	102
3.7.2	Tail Rotor and Tail Group	103
3.7.2.1	Tail Rotor	103
3.7.2.1.1	Description and Components	103
3.7.2.1.2	Tail Rotor Blade Construction	103
3.7.2.1.3	Blade Restrainer	103
3.7.2.1.4	Tail Rotor Controls	103
3.7.2.1.5	Tail Rotor Blade Folding	103
3.7.2.1.6	Blade Tracking and Balancing	103
3.7.2.1.7	Blade Erosion Protection Strip	103
3.7.2.2	Tail Group	103
3.7.2.2.1	Vertical Pylon	103
3.7.2.2.2	Stabilator	103
3.7.3	Body Group	104
3.7.3.1	Fuselage	104
3.7.3.1.1	General Description	104
3.7.3.1.2	Construction	104
3.7.3.1.3	Cockpit	105
3.7.3.1.3.1	Windshield	105
3.7.3.1.4	Mid–fuselage	105
3.7.3.1.4.1	Crewchief/Gunner Stations	105
3.7.3.1.4.2	Troop/Cargo Compartment	106

TABLE OF CONTENTS (Cont'd)

Paragraph	Title	Page
3.7.3.1.5	External Cargo Hook Provisions	107
3.7.3.1.6	Not used	107
3.7.3.1.7	Transition Section	107
3.7.3.1.7.1	Equipment Compartments	107
3.7.3.1.8	Tail Cone	107
3.7.4	Landing Gear	107
3.7.4.1	General Description and Components	107
3.7.4.1.1	Vertical Force Attenuation in the Landing Gear	108
3.7.4.1.2	Landing Gear Location	108
3.7.4.2	Main Landing Gear	108
3.7.4.2.1	Wheels and Brakes	108
3.7.4.2.1.1	Brake Control Subsystem	108
3.7.4.2.1.2	Casings	108
3.7.4.2.2	Shock Absorbers	109
3.7.4.2.3	Inspection and Maintenance	109
3.7.4.3	Auxiliary Landing Gear (Tail Wheel)	109
3.7.4.3.1	Wheel	109
3.7.4.3.2	Casing	109
3.7.4.3.3	Shock Absorber	109
3.7.4.3.4	Steering Control	109
3.7.4.4	Ground Clearances	109
3.7.4.5	Inspection and Maintenance	109
3.7.5	Propulsion System	110
3.7.5.1	Description and Components	110
3.7.5.2	Main Propulsion Units	110
3.7.5.2.1	Residual Fluids	110
3.7.5.2.2	Lubrication Subsystem	110
3.7.5.3	Engine Driven Accessories	110
3.7.5.4	Air Induction Subsystem	110
3.7.5.4.1	Ice Protection Subsystem	110
3.7.5.5	Exhaust Subsystem	111
3.7.5.6	Cooling Subsystem	111
3.7.5.7	Fuel Subsystem	113
3.7.5.7.1	Description and Components	113
3.7.5.7.2	Fuel Pumps	115
3.7.5.7.2.1	Fuel System Booster Pumps	115

TABLE OF CONTENTS (Cont'd)

Paragraph	Title	Page
3.7.5.7.3	Fuel Tanks	115
3.7.5.7.3.1	Fuel Tank Capacity	115
3.7.5.7.3.2	Fuel Tank Installation	115
3.7.5.7.3.3	DELETED	115
3.7.5.7.3.4	Fuel Tanks (ESSS)	115
3.7.5.7.4	Vent Subsystem	115
3.7.5.7.5	Piping and Fittings	115
3.7.5.7.6	Valves	115
3.7.5.7.7	Strainers and Filters	116
3.7.5.7.8	Fuel Quantity Gaging	116
3.7.5.7.9	Drainage Provisions	116
3.7.5.7.10	Refueling Provisions	116
3.7.5.7.11	Defueling Provisions	116
3.7.5.8	Starting Subsystem	117
3.7.5.8.1	Description	117
3.7.5.8.2	Starter Installation	117
3.7.5.8.3	Pneumatic Starters	117
3.7.5.9	Engine Nacelle Group	118
3.7.5.9.1	Description and Components	118
3.7.5.9.2	Nacelle Group Construction	118
3.7.5.9.3	Engine Mount	118
3.7.5.9.4	Firewalls	118
3.7.5.9.5	Cowling	118
3.7.5.9.6	Drains	119
3.7.5.9.7	Fire Warning Subsystem	119
3.7.5.9.8	Fire Extinguishing Subsystem	119
3.7.5.9.9	Engine Water Wash	119
3.7.5.10	Drive Subsystem	120
3.7.5.10.1	Description and Components	120
3.7.5.10.2	Main Transmission	120
3.7.5.10.2.1	Main Transmission Lubrication	121
3.7.5.10.2.2	Main Transmission Cooling	121
3.7.5.10.3	Shafting	121
3.7.5.10.4	Intermediate Gearbox	121
3.7.5.10.5	Tail Gearbox	121
3.7.5.10.6	Not used	122

*

TABLE OF CONTENTS (Cont'd)

Paragraph	Title	Page
3.7.5.10.7	Overrunning Clutches	122
3.7.5.10.8	Drive Subsystem Accessories	122
3.7.5.11	Auxiliary Power Unit (APU)	122
3.7.5.11.1	Description and Components	122
3.7.5.11.2	APU Installation	122
3.7.5.11.3	APU Starting	122
3.7.5.11.4	APU Controls/Indicators	124
3.7.5.11.5	APU Components	124
3.7.5.12	Propulsion Subsystem Controls	125
3.7.5.12.1	Control Design	125
3.7.5.12.2	Engine Controls	125
3.7.5.12.2.1	Engine Shutdown Stop	125
3.7.5.12.3	Starter Controls	125
3.7.5.12.4	APU Controls	125
3.7.5.12.5	Cooling Air Controls	125
3.7.5.12.6	Fuel Subsystem Controls	125
3.7.6	Flight Control Systems	126
3.7.6.1	Primary Flight Control System	126
3.7.6.1.1	Flight Control Stations	126
3.7.6.1.2	Mechanical Control System	126
3.7.6.1.3	Hydraulic Control System	126
3.7.6.2	Automatic Stabilization Equipment	126
3.7.6.2.1	Stability Augmentation System (SAS)	127
3.7.6.2.2	Flight Path Stabilization	127
3.7.6.2.3	Stabilator System	127
3.7.6.3	Control Trim Function	127
3.7.6.4	Pedal Trim	127
3.7.7	Instrument and Navigational Equipment	128
3.7.7.1	Instruments	128
3.7.7.2	Instrument Panel	131
3.7.7.2.1	Instrument Glare Shield	131
3.7.7.3	Markings	131
3.7.7.4	Pitot and Static Pressure Subsystem	131
3.7.7.5	Caution/Warning/Advisory Signals	131
3.7.7.6	Aural Warning Signals	133
3.7.7.7	Advanced Avionics	134

TABLE OF CONTENTS (Cont'd)

Paragraph	Title	Page
3.7.8	Hydraulic and Pneumatic Subsystems	135
3.7.8.1	Hydraulic Subsystem	135
3.7.8.1.1	No. 1 Hydraulic System	136
3.7.8.1.2	No. 2 Hydraulic System	136
3.7.8.1.3	No. 3 Hydraulic System	136
3.7.8.1.4	Summary of Actuated Items	136
3.7.8.1.5	Reservoirs	136
3.7.8.1.6	Quantity Gages	136
3.7.8.1.7	Pump	136
3.7.8.1.8	Tubing	136
3.7.8.1.9	Not used	137
3.7.8.1.10	Filtration	137
3.7.8.1.11	Pressure Gage	137
3.7.8.2	Pneumatic Subsystem	137
3.7.9	Electrical Subsystem	138
3.7.9.1	Description	138
3.7.9.2	Electrical Power Supply	138
3.7.9.2.1	Primary Electrical Power	138
3.7.9.2.1.1	Primary AC Subsystems	138
3.7.9.2.1.2	Main Power Source	138
3.7.9.2.1.3	Generator Drives	138
3.7.9.2.2	Primary DC Subsystem	138
3.7.9.2.3	Battery	138
3.7.9.2.3.1	Not used	138
3.7.9.2.3.2	Battery Relay	138
3.7.9.2.3.3	Conversion Power	139
3.7.9.2.4	Generator Control Unit	139
3.7.9.2.5	Emergency Power Equipment	139
3.7.9.2.5.1	Transfer of Emergency Electric Power	139
3.7.9.2.6	Bus System	139
3.7.9.2.6.1	Primary Bus System	139
3.7.9.2.6.2	Non–Essential Bus System	140
3.7.9.2.6.3	Essential Bus System	140
3.7.9.2.7	Power Utilization	140
3.7.9.2.7.1	Receptacles	140

TABLE OF CONTENTS (Cont'd)

Paragraph	Title	Page
3.7.9.2.8	Ground Power	140
3.7.9.2.8.1	External Power	140
3.7.9.2.8.2	Auxiliary Power Unit Generator	140
3.7.9.2.9	Equipment Installation	141
3.7.9.2.9.1	Aircraft Wiring	141
3.7.9.2.9.2	Bonding/Grounding	141
3.7.9.3	Lighting Subsystem	143
3.7.9.3.1	Exterior Lighting Subsystem	143
3.7.9.3.1.1	Navigation Light	143
3.7.9.3.2	Anti–Collision Lights	143
3.7.9.3.2.1	Daylight High–Intensity Anti–Collision Light	143
3.7.9.3.2.2	Night Anti–Collision Light	143
3.7.9.3.2.3	Field of Coverage	143
3.7.9.3.2.4	Shielding	143
3.7.9.3.2.5	Flashing Characteristics	143
3.7.9.3.2.6	Light Intensity	144
3.7.9.3.2.7	Controls	144
3.7.9.3.3	Formation Lights	144
3.7.9.3.4	Landing Light	144
3.7.9.3.5	Controllable Searchlight	144
3.7.9.3.6	Interior Lighting	144
3.7.9.3.6.1	Cockpit Lighting	145
3.7.9.3.6.2	Troop/Cargo Compartment Lights	146
3.7.9.3.6.3	Inspection and Maintenance Lights	146
3.7.9.3.6.4	Cargo Hook Lights	146
3.7.10	Avionic Subsystem	147
3.7.10.1	Intercommunications Subsystem	147
3.7.10.1.1	Component Location	147
3.7.10.1.2	Transmit Selector Switch	147
3.7.10.1.3	Receiver Switches	148
3.7.10.1.4	Description Placards	148
3.7.10.1.5	External Connectors	148
3.7.10.1.6	Cords and Connectors	148
3.7.10.1.7	Microphone Keying	149
3.7.10.1.7.1	Pilot and Copilot Stations	149
3.7.10.1.7.2	Gunner Stations	149
3.7.10.1.7.3	External Connector	149
3.7.10.1.7.4	Troop/Cargo Compartment Station	149

TABLE OF CONTENTS (Cont'd)

Paragraph	Title	Page
3.7.10.1.8	Stowage	149
3.7.10.2	Antennas	150
3.7.10.3	VHF–FM Communications and Homing	150
3.7.10.3.1	AN/ARC–186(V) Audio Distribution	150
3.7.10.3.2	AN/ARC–186(V) Homing Visual Presentation	150
3.7.10.3.3	VHF–FM Communication Antenna	150
3.7.10.3.3.1	Antenna Characteristics	150
3.7.10.3.4	VHF–FM Homing Antenna	151
3.7.10.3.4.1	FM Homing Antenna Characteristics	151
3.7.10.4	UHF Communication	152
3.7.10.4.1	Audio Distribution	152
3.7.10.4.2	UHF Communications Antenna	152
3.7.10.4.2.1	UHF Communication Antenna Characteristics	152
3.7.10.5	AN/ARC–186(V) VHF–AM Communications	153
3.7.10.5.1	Audio Distribution	153
3.7.10.5.2	AN/ARC–186(V) VHF–AM Antenna	153
3.7.10.5.2.1	AN/ARC–186(V) VHF Antenna Characteristics	153
3.7.10.6	Communication Security	154
3.7.10.6.1	Control	154
3.7.10.6.2	Communication Security Requirements	154
3.7.10.7	Second VHF/FM Radio	154
3.7.10.7.1	Second VHF–FM Audio Distribution	154
3.7.10.7.2	Second VHF–FM Radio Communication Antenna	154
3.7.10.8	Auxiliary Communication Provisions	154
3.7.10.8.1	Not used	154
3.7.10.8.2	Retransmission	154
3.7.10.9	Not used	154
3.7.10.10	Civil Navigation Set AN/ARN–147(V)	155
3.7.10.10.1	Visual Presentation	155
3.7.10.10.2	Audio Signal Distribution	155
3.7.10.10.3	Control	155
3.7.10.10.4	Antennas	155
3.7.10.11	Automatic Direction Finder	155
3.7.10.11.1	Audio Distribution	155
3.7.10.11.2	Visual Presentation	155
3.7.10.11.3	Antenna	155
3.7.10.11.4	Not used	155

TABLE OF CONTENTS (Cont'd)

Paragraph	Title	Page
3.7.10.11.5	Not used	155
3.7.10.11.6	Control	155
3.7.10.12	Doppler Navigation System	155
3.7.10.12.1	Visual Presentation	155
3.7.10.12.2	Antenna	155
3.7.10.13	Not used	155
3.7.10.14	LDNS, VOR/ILS and FM Homing	156
3.7.10.15	Gyromagnetic Compass	156
3.7.10.15.1	Signal Presentation	156
3.7.10.15.2	Compass Control	156
3.7.10.15.3	Compass Transmitter	156
3.7.10.16	Identification	156
3.7.10.16.1	Transponder	156
3.7.10.16.2	Audio Distribution	156
3.7.10.16.3	Antenna	156
3.7.10.16.4	Computer	156
3.7.10.16.5	Mount	156
3.7.10.16.6	Cable Connector	156
3.7.10.16.7	Altitude Encoding	156
3.7.10.17	Troop Unit Commander Antenna	156
3.7.10.18	Proximity Warning Device	157
3.7.10.19	Contractor Furnished Electronics	157
3.7.10.19.1	Environmental Service Conditions	158
3.7.10.20	Not used	158
3.7.10.21	Not used	158
3.7.10.22	Radar Receiving Set AN/APR–39	158
3.7.10.23	Absolute Altimeter AN/APN–209A	159
3.7.10.24	Countermeasure Set	159
3.7.10.25	Dispenser System	159
3.7.10.26	Command Instrument System (CIS)	159
3.7.10.27	Crash Locator Beacon	159
3.7.10.28	Global Positioning System	159
3.7.10.29	Heads–Up Display AN/AVS–7	159
3.7.11	Armament Subsystem	160
3.7.11.1	Description and Components	160
3.7.11.2	Pintle Mounts	160

TABLE OF CONTENTS (Cont'd)

Paragraph	Title	Page
3.7.11.3	Gunner Windows	160
3.7.11.3.1	Field of Fire	160
3.7.11.3.2	Gun Storage	160
3.7.11.4	Ammunition Complement	160
3.7.12	Furnishings and Equipment	161
3.7.12.1	Crew Station	161
3.7.12.1.1	Pilot Seats	161
3.7.12.1.2	Crewchief/Gunner Seats	161
3.7.12.1.3	Control/Displays	161
3.7.12.1.4	Map/Data Case	162
3.7.12.1.5	Checklist Pocket	162
3.7.12.1.6	DELETED	162
3.7.12.1.7	Fire Extinguishers	162
3.7.12.1.8	First Aid Kit	162
3.7.12.1.9	Crash Ax	162
3.7.12.1.10	Mission/Survival/Emergency Equipment Stowage	162
3.7.12.1.11	Weapons and Smoke Grenade Rack	162
3.7.12.1.12	Windshield Wiper	162
3.7.12.1.13	Blackout Devices	162
3.7.12.1.14	Rearview Device	162
3.7.12.1.15	Locking System	162
3.7.12.2	Troop/Cargo Compartment	163
3.7.12.2.1	Troop Seats	163
3.7.12.2.2	Crewchief/Gunner's Troop Seat Construction	164
3.7.12.2.3	Medical Evacuation Kit Accommodations	164
3.7.12.3	Thermal and Acoustical Insulation	164
3.7.13	Environmental Control System	164
3.7.13.1	Environmental Control System (ECS)	164
3.7.13.1.1	Heating	164
3.7.13.1.2	Ventilation	164
3.7.13.2	Anti–icing/De–icing	165
3.7.13.2.1	Design Criteria	165
3.7.13.2.2	Anti–icing/De–icing of Non–Transparent Areas	165
3.7.13.2.3	Anti–Icing, Defrosting/Defogging of Transparent Areas	165
3.7.13.2.4	Engine Anti–icing	165
3.7.13.2.5	Controls	165
3.7.13.3	Air Conditioning	165

TABLE OF CONTENTS (Cont'd)

Paragraph	Title	Page
3.7.14	Load and Handling Group	166
3.7.14.1	Aircraft Handling	166
3.7.14.1.1	Towing Provisions	166
3.7.14.1.2	Jacking Provisions	166
3.7.14.1.3	Tiedown and Mooring Provisions	166
3.7.14.1.4	Hoisting Provisions	166
3.7.14.1.5	Leveling Provisions	166
3.7.14.1.6	Integral Work Platform	166
3.7.14.2	Cargo Handling Provisions	167
3.7.14.2.1	Tiedown Fittings	167
3.7.14.2.2	Cargo Hook	167
3.7.14.2.2.1	Normal Release	167
3.7.14.2.2.2	Emergency Release	167
3.7.14.2.2.3	Ground Release	167
3.7.15	Survivability Design	167
3.7.15.1	Not used	167
3.7.15.2	Reduction of Detection	167
3.7.16	Mission Flexibility Kits	168
3.7.16.1	Rescue Hoist	168
3.7.16.2	Winterization Kit	168
3.7.16.3	External Extended Range Fuel System Kit	168
3.7.16.4	Blackout Devices Kit	168
3.7.16.5	External Electrical Rescue Hoist Kit	168
3.7.16.6	Hoist Cable Deflector Kit	168a
3.7.16.7	Hoisting Sling	168a
3.7.16.8	Component Handling Adapter	168a
3.7.16.9	Aeromedical Evacuation Kit	169
3.7.16.9.1	Four Man Configuration	169
3.7.16.9.2	Six Man Configuration	169
3.7.16.10	Air Transportability Kit	169
3.7.17	Ground Support Equipment	170
3.7.17.1	Maintenance Crane	170
3.7.17.2	Aircraft Hoisting Sling	170
3.7.17.3	Component Hoisting Sling	171
3.7.17.4	Component Handling Adapters	171
3.7.17.5	Steering and Tow Bar	171

TABLE OF CONTENTS (Cont'd)

Paragraph	Title	Page
3.7.17.6	Air Duct Plugs and Covers	171
3.7.17.7	Air Transport Kit	171
3.7.17.8	Ground Servicing Equipment	171
3.7.17.9	Ground Test Equipment	171
3.8	Precedence	171
4.	Not used	171
5.	Not used	171
6.	NOTES	172
6.1	Not used	172
6.2	Not used	172
6.3	Definitions	172
6.3.1	Design Limit Speed	172
6.3.1.1	V Limit Auto	172
6.3.2	Design Maximum Level Flight Speed	172
6.3.3	Intermediate Power	172
6.3.3.1	Maximum Rated Power	172
6.3.4	Maximum Continuous Power	172
6.3.5	Moderate Icing Intensity	172
6.3.6	Moderate Turbulence	172
6.3.7	Space, Weight, Power and Structural Provisions	172
6.3.7.1	Space Provision	172
6.3.7.2	Weight Provisions	173
6.3.7.3	Power Provisions	173
6.3.7.4	Structural Provisions For	173
6.3.8	Complete Provisions	173
6.3.8.1	Fixed Provisions	173
6.3.9	Source Radiation	173
6.3.10	Total Source Radiation	173
6.3.11	Absolute Radiation	173
6.4	Miscellaneous Notes	173
6.4.1	Electronic equipment nomenclature	173

TABLE OF CONTENTS (Cont'd)

LIST OF FIGURES

Figure	Title	Page
FIGURE 1.	UH-60L GENERAL ARRANGEMENT	II-2
FIGURE 2.	INBOARD PROFILE	II-4
FIGURE 3.	AIR TRANSPORTABILITY (C-141B)	II-12
FIGURE 4.	INLET RAM RECOVERY	20
FIGURE 5.	INLET TOTAL TEMPERATURE RISE	20
FIGURE 6.	EXHAUST STATIC PRESSURE RECOVERY VS SWIRL ANGLE	21
FIGURE 7.	MAXIMUM CONTINUOUS POWER AVAILABLE VS ALTITUDE	22
FIGURE 8.	INTERMEDIATE POWER AVAILABLE	23
FIGURE 9.	MAXIMUM POWER AVAILABLE	24
FIGURE 10.	CONTINGENCY POWER AVAILABLE	25
FIGURE 11.	INSTALLED FUEL FLOW	26
FIGURE 12.	OGE HOVER CEILINGS	27
FIGURE 13.	IGE HOVER CEILINGS	28
FIGURE 14.	VERTICAL RATE OF CLIMB	29
FIGURE 15.	POWER REQUIRED IN LEVEL FLIGHT; SEA LEVEL STANDARD DAY	30
FIGURE 16.	POWER REQUIRED IN LEVEL FLIGHT; 2000 FT., 70°F	31
FIGURE 17.	POWER REQUIRED IN LEVEL FLIGHT; 4,000 FT., 95°F	32
FIGURE 18.	SPECIFIC RANGE IN LEVEL FLIGHT; SEA LEVEL, STANDARD DAY	33
FIGURE 19.	SPECIFIC RANGE IN LEVEL FLIGHT; 2000 FT., 70°F	34
FIGURE 20.	SPECIFIC RANGE IN LEVEL FLIGHT; 4000 FT., 95°F	35
FIGURE 21.	MAXIMUM SPEED AT 17706 LB., 95°F	36
FIGURE 22.	MAXIMUM SPEED AT 22000 LB., STANDARD DAY	37
FIGURE 23.	INTERNAL PAYLOAD/RADIUS CAPABILITY/SEA LEVEL, STANDARD DAY	38
FIGURE 24.	INTERNAL PAYLOAD/RADIUS CAPABILITY/5000 FT., STANDARD DAY	39
FIGURE 25.	INTERNAL PAYLOAD/RADIUS CAPABILITY/4000 FT., 95°F	40
FIGURE 26.	MAXIMUM RATE OF CLIMB	41
FIGURE 27.	SERVICE CEILINGS	42
FIGURE 28.	AUTOROTATIONAL DESCENT PERFORMANCE	43
FIGURE 28A.	SLIDESLIP ENVELOPE	44
FIGURE 29A.	V-NZ DIAGRAM, SEA LEVEL, STANDARD DAY	45
FIGURE 29B.	V-NZ, SEA LEVEL, STANDARD DAY	46
FIGURE 29C.	V-NZ, SEA LEVEL, STANDARD DAY	47
FIGURE 29D.	V-NZ, SEA LEVEL, STANDARD DAY	48
FIGURE 29E.	V-NZ, SEA LEVEL, STANDARD DAY	49
FIGURE 30A.	V-NZ, DIAGRAM, 4000 FT., 95°F DAY	50
FIGURE 30B.	V-NZ, DIAGRAM, 4000 FT., 95°F DAY	51
FIGURE 31.	MAXIMUM AERODYNAMIC LIFT CAPABILITY, SEA LEVEL, STANDARD DAY	52
FIGURE 32.	MAXIMUM AERODYNAMIC LIFT CAPABILITY, 4000 FT., 95°F DAY	53
FIGURE 33.	LONGITUDINAL CENTER OF GRAVITY LIMITS	54
FIGURE 34.	LATERAL CENTER OF GRAVITY LIMITS	55
FIGURE 35.	HOT/COLD ATMOSPHERIC TEMPERATURE CURVE	112
FIGURE 36.	APU STARTING ENVELOPE	123
FIGURE 36A.	APU GENERATOR ALTITUDE-TEMPERATURE RATING CHART	142

TABLE OF CONTENTS (Cont'd)

LIST OF TABLES

Table	Title	Page
TABLE I	RELIABILITY AND MAINTAINABILITY VALUES FOR GFP	73
TABLE II	MISSION RELIABILITY VALUES FOR GFP	74
TABLE IIA	GFP CORRECTIVE MAINTENANCE VALUES	74
TABLE A.	MAJOR DYNAMIC COMPONENT INHERENT MTBR AND MTBRRDR VALUES	79
TABLE B.	MAJOR NON-DYNAMIC COMPONENT INHERENT MTBR AND MTBRRDR VALUES	80
TABLE AB.	CONTRACTOR FURNISHED EQUIPMENT EMI QUALIFICATION EXCEPTIONS	95
TABLE AC.	AIRCRAFT ELECTROMAGNETIC VULNERABILITY SPECTRUM	97

LIST OF APPENDICES

Appendix	Title	Page
APPENDIX I	FLYING AND GROUND HANDLING QUALITIES SPECIFICATION	I-1
APPENDIX II	DRAWINGS	II-1
APPENDIX III	CONFIGURATION AUDIT TABLE	III-1

1. SCOPE

1.1 This specification establishes the requirements for the UH-60L BLACK HAWK Aircraft.

1.2 Compliance. The design requirements of the System Specification, DARCOM-CP-2222-S1000K, have been translated into this contractor prepared Aircraft Specification. Design features designated as desirable in the System Specification have been specifically incorporated as described in the following sections:

Items	System Spec Para. No.	Aircraft Spec Para. No.
0.0g Pushover Load Factor (0.25g required)	3.2.1.1.1.4 c	3.2.1.1.1.5
Protective Coating shall be field restorable	3.3.3.2	3.3.3.2
Ceiling and floor mounted troop seats	3.7.3.5 e	3.7.12.2.1
Common lubricant in engines and main, tail, and intermediate gearboxes	3.7.5.10.7	3.7.5.10.2.1
Space and power provisions for Advanced Avionics	3.7.7.1.3.3	3.7.7.7
Space and power provisions for Crash Locator Beacon	3.7.10.20	3.7.10.27
One-hand lap belt unlock	3.7.12.2.3 d	3.7.12.2.1
Seats fold and stow in a minimum volume outside the cargo space	3.7.12.2.3 f	3.7.12.2.1
Space provisions for crew air-conditioning	3.7.13.1.3	3.7.13.3

2. APPLICABLE DOCUMENTS

2.1 Documents. The following documents of the exact issue shown form a part of this specification to the extent specified herein. In the event of conflict between a document referenced herein (except for the M&P Index), and the contents of this specification, the contents of this specification shall be considered a superseding requirement. In the other paragraphs of this specification only the basic document number is stated. The revisions and changes for applicable documents are identified only in this paragraph. The military specifications and standards listed shall be for information or for guidance only.

2.1.1 Specifications

2.1.1.1 Military Specifications

MIL–E–5400M(2)	Electronic Equipment, Aircraft, General Specification for
MIL–C–5604 B	Compass, Magnetic, Pilots, Standby
MIL–H–5606 C	Hydraulic Fluid, Petroleum Base, Aircraft, Missile and Ordnance
MIL–T–5624 H (1)	Turbine Fuel, Aviation, Grades JP–4 and JP–5
MIL–I–5721 C(1)	Indicator, Indicated Air Speed, 20–250 knots
MIL–A–5999 A	Antenna for Aircraft Marker Beacon Equipment, General Specification for the Design of
MIL–A–6325	Antenna, Glide Path Radio Receiving Equipment, General Specification for
MIL–T–6508 B	Thermometer, Self–Indicating, Bimetallic
MIL–L–7808 G (2)	Lubrication Oil, Aircraft Turbine Engine, Synthetic Base
MIL–L–16462 B	Litter, Folding, Rigid Pole
MIL–L–23699 B (2)	Lubricating Oil, Aircraft Turbine Engine, Synthetic Base
MIL–I–49075(EL) Rev B (Preliminary Draft) dated 29 Aug 1975	Installation and Acceptance Testing of Receiving Set, Radio AN/ARN–123(V)
MIL–I–49091(EL) (Preliminary Draft) dated 15 Oct 1975	Installation and Acceptance Testing of AN/ARC–164 Radio Set
MIL–I–58067	Indicator, Vertical Velocity, Rapid Response, Acceleration Sensitive
MIL–A–81851 B(1)	Altimeter, AAU–31/A
MIL–A–81852	Attitude Encoder, AAU–32/A
MIL–B–83282	Hydraulic Fluid, Fire Resistant, Synthetic Hydrocarbon Base, Aircraft
DOD–L–85734	Lubricating Oil, Helicopter Transmission System, Synthetic Base

2.1.1.2 Other Government Activity

1680-UH60-000	Seat, Crew, Armored Crashworthy for BLACK HAWK
DARCOM-CP-2222-S1000K	Prime Item Development Specification (PIDS) UH-60L BLACK HAWK Aircraft

2.1.2 Standards

2.1.2.1 Federal Standards

FED STD 595 A(1)	Color Requirements for Individual Color Chips

2.1.2.2 Military Standards

MIL-STD-210 A(1)	Climatic Extremes for Military Equipment
MIL-STD-461A Notice 4	Electromagnetic Interference Characteristics, Requirements for Equipment
MIL-STD-462 Notice 3	Electromagnetic Interference Characteristics, Measurement of
MIL-STD-721 C-1	Definitions of Terms for Reliability and Maintainability
MIL-STD-704 A-2	Electric Power, Aircraft, Characteristics and Utilization of
MIL-STD-765 A	Compass Swinging, Aircraft, General Requirements for
MIL-STD-1288	Aircrew Protection Requirements, Non-Nuclear Weapons Threat
MIL-STD-1472 A	Human Engineering Design Criteria for Military Systems, Equipment, and Facilities
MS 3450W16-11S	Connectors, Receptacle, Electrical
MS 3450W20-4S	Jam Nut Mounting, Rear Release
MS 14100	Tape, Identification, Coaxial Cable Transmission Line Assembly
MS 17245	Light, Cockpit, Utility
MS 25237-387	Lamp, Incandescent, Single Contact, Midget Flanged Base (T-1 3/4 Bulb)
MS 25182-2	Plug, Electric, Aircraft Storage Battery
MS 35480 B	Lamp, Incandescent R-12 Bulb, Single Contact, Bayonet Candelabra Base
MS 90298 A	Connector Receptacle, Electric Grounding
MS 90362	Receptacle, External Electric Power, Aircraft, 115/200 Volts, 400 cps

2.1.3 Other Government Documents

AMCP 706-134	Engineering Design Handbook-Maintenance Guide for Design
AR 70-38	Research, Development, Test and Evaluation of Materiel for Extreme Climatic Conditions
TB-55-100	Transportability Criteria Shock and Vibration
TR 71-22	Crash Survival Design Guide
TR 72-52CE	Anthropometry of U. S. Army Aviators - 1970
TM 38-750-1 dated December 1969	The Army Maintenance Management System (TAMMS), Field Command Procedures,
PDMME-367-3	Purchase Description for Clock, Aircraft, Electronic
ATCOM Drwg. No. 1670-EG-140	Helicopter Recovery Kit.

2.1.4 Avionics Specifications

AV-IT5802-0001A, dated 12 August 1980	AN/ARC-186(V) VHF AM/FM Remote Radio Set Installation and Acceptance Testing
ES-F-19985OB 19 April 1967	Installation Data Outline Dimensions KY-28
SCL-I-0026C 18 June 1970	Installation of Gyromagnetic Compass Set AN/ASN-43 and Associated Components in Army Aircraft
SCL-T-0026C 19 June 1970	Testing of Gyromagnetic Compass Set AN/ASN-43 for Army Aircraft Bench, Preflight and Flight Tests
SCL-I-0048C 7 Dec 1970	Avionics Installation Instructions for Control Communications System C-6533( )/ARC
SCL-T-0048C 7 Dec 1970	Avionics Bench, Preflight and Flight Test Instructions for Control, Communications System C-6533( )/ARC
EI-615	Avionics Installation Instructions for Receiver-Transmitter RT-1156/APX-100(V)1
ET-615 Preliminary Undated	Avionics Bench, Preflight and Flight Instructions for Receiver-Transmitter RT-1156/APX-100(V)1 and RT-1157/APX-100(V)2

2.2 Non-Government Documents

2.2.1 Industry Standards

ASTM 381	Fracture Toughness Testing and Its Application
ASTM E399	Plane – Strain Fracture Toughness of Metallic Materials, Test for
ASTM STP 410	Plane – Strain Crack Toughness Testing of High Strength Metallic Materials
ASTM STP 463	Review of Development in Plane – Strain Fracture Toughness Testing

2.2.2 Sikorsky Documents

SS-30	Hose and Hose Assembly Flexible Ballistic Tolerant Self-Sealing Aromatic Fuel
SER-50586 D	Fatigue Properties, and Analysis
SER-700701	UH-60L Aircraft Specification, Classified Attachment to
SER-70100 Rev. 4	Methods of Structural Reliability Substantiation Based on Laboratory Fatigue and Flight Test Data
SER-70155 25 Oct 1980	BLACK HAWK UH-60A Electromagnetic Compatibility (EMC) Ground and Flight Test Report, Maturity
SER-70173 July 1976	YUH-60A/UTTAS AIDAPS Design
SER-702417	Electrical Load and Power Source Analysis
SER-70987 Rev. 1 15 Jan 1987	BLACK HAWK UH-60A Electromagnetic Compatibility (EMC) Ground and Flight Test Report for the ARC-186 Radio Installations
SER-701980 27 Apr 94	UH-60 Asymmetric Lateral Center of Gravity Envelope Definition Flight Test Report
SER-701996 17 Feb 1994	Electromagnetic Compatibility and Lighting Evaluation Test Report for the UH-60L BLACK HAWK Digital Clock
SES-700006 Rev. 1	Critical Item Development Specification (CIDS) for the ESSS

2.2.2 (Cont'd)

SES–700008	Critical Item Development Specification (CIDS) for the Hover IR Suppressor System (HIRSS) for the UH–60A Aircraft
SES–701043 Rev. 8	Detail Specification for 30/45 KVA Oil Spray Cooled Generator System
SES–701044 Rev. 4	Detail Specification for a 20/23.8 KVA Air Cooled Generator System
SES–701045 Rev. 4	Detail Specification for 5.5 AH Battery System
SES–701051 Rev. 7	Finishing and Coatings Specification and Corrosion Control Plan
SES–701064 Rev. 3	Detail Specification for Converter 200 Ampere 28 Volts Review Current
SES–701110	Specification for Prime and APU Boost Pumps
SCD 56130–63015	Pump, Boost
M&P Index	Sikorsky Aircraft Material and Process Specification Index (updated routinely as required)
TM 1–1520–237–10	Operator's Manual for Army Model UH–60L Helicopter
SES–700701	Classified Attachment to UH–60L Aircraft Specification SES–700700

2.2.3 Other Contractor Documents

TM6–125–108	General Dynamics Report (Classified)
GE–SA–16–1348	Interface Memorandum Addressing 701C IR Signature
GE–SA–8–1456	Interface Memorandum Providing Increased DEC Temperature Limit
E1290 15 April 1988, Including SCNs 1 thru 4	General Electric Engine Specification for the T700–GE–701C Engine
DARCOM–CP–2222–02000C 31 December 1985	Specification for T700–GE–700 Turbo Shaft Engine

3. REQUIREMENTS

3.1 Item Definition

3.1.1 General Description. The aerial vehicle shall be a twin engine rotary wing aircraft designed to carry 11 combat equipped troops and a crew of three. The aerial vehicle product baseline is defined by general assembly drawing 70000–00550–055.

3.1.1.1 Item Drawings. Refer to Figures 1, 2, and 3, General Arrangement, Inboard Profile and Air Transportability Configurations, respectively.

3.1.1.2 Interface Definition. The contractor shall be responsible for installation of Government Furnished Property (GFP) listed in 3.1.4 into the UH–60L.

3.1.2 Missions. The UH–60L shall perform primary and secondary missions by transporting internal loads under visual and instrument conditions, day and night. External loads shall be transported under visual flight conditions.

3.1.3 Major Subsystem/Component List. Major subsystems of the aircraft shall be as follows:

- Main rotor group
- Anti–torque (tail) rotor and tail group
- Body group
- Landing gear group
- Propulsion subsystem
  - Main propulsion engines
  - Engine air induction subsystem
  - Exhaust subsystem
  - Engine cooling subsystem
  - Engine fuel subsystem
  - Engine starting subsystem
  - Engine nacelle group
  - Drive subsystem
  - Auxiliary power unit
  - Propulsion subsystem controls
- Flight controls group
- Instruments/navigation equipment
- Hydraulic/pneumatic subsystem
- Electrical subsystem
- Avionics group
- Armament group
- Furnishings/equipment group
- Environmental control group
- Load/handling group
- Ground support equipment

3.1.4 Government Furnished Property List. The following items shall be provided as Government Furnished Property (GFP). GFP shall not be altered, reworked, or modified without prior approval of the procuring activity. Under Status, items to be installed in the aircraft by the Contractor are indicated I; items for which complete provisions are made are indicated CP.

GFP LIST

ITEM NO.	STATUS	QTY. PER A/C	DESCRIPTION	IDENTIFICATION	UNIT WT. (LB.)
	POWER PLANT				
1	I	2	Engine T700–GE–701C 6071T24G01	NSN 2840–01–284–4011	(Wet Weight 463.4 lb. includes 7.4 lb. of trapped fluid)
2	I	1	HIRSS Core Kit 1931T78G01	NSN 1560–01–262–5309	152.2
	AUXILIARY POWER UNIT (APU)				
1	I	1	Auxiliary Power Unit (APU) (GTCP36–150 (BH)) Honeywell 3800480–2	NSN 2840–01–373–4275	87.0
2	I	1	Electronic Sequencing Unit (ESU) Honeywell 2118806–2 or 2118806–1	NSN 6110–01–328–5258	6.2
3	I	1	Plate Garrett 3615185–1	NSN 5310–01–368–7405	†
4	I	1	Ignition Seal Assembly Garrett 3615692–1	NSN 5330–01–368–7475	†
5	I	1	Fuel Line Seal Garrett 3615184–1	NSN 5330–01–368–7474	†
			– OR –		
1	I	1	Auxiliary Power Unit (APU) (T–62T–40–1) Sundstrand 116305–302	NSN 2835–01–369–2818	83.3 (Dry Weight)
2	I	1	Electronic Sequencing Unit (ESU) Sundstrand 163290–100	NSN 2995–01–169–5291	4.2
3	I	1	Plate Assembly Firewall Sundstrand 169036–1	NSN 1560–01–234–2176	†
4	I	2	Plate Assembly Ignition Seal Sundstrand 160362–100	NSN 1560–01–109–2530	†
5	I	1	Grommet, Tube (Fuel Line Seal) 169037–1	NSN 5325–01–233–8307	†

† Weight included in Auxiliary Power Unit weight

3.1.4 (Cont'd)

ITEM NO.	STATUS	QTY. PER A/C	DESCRIPTION	IDENTIFICATION	UNIT WT. (LB.)
	ELECTRONICS				
1	I	1	UHF-FM Radio Set RT-1518C/ARC-164(V)	NSN 5821-01-352-7209	9.5
2	I	5	Interphone Control C-6533/ARC	NSN 5895-00-895-4175	2.0
3	I	1	Handset, H-250A/U	NSN 5965-00-043-3463	0.5
	VHF-AM/FM RADIO SET AN/ARC-186(V)				
1	I	1	Receiver-Transmitter RT-1300A/ARC-186(V)	NSN 5821-01-194-8160	7.0
2	I	1	Mount MT-6051/ARC-186(V)	NSN 5975-01-066-5318	1.1
3	I	1	Control C-10604A(V6)/ARC-186(V)	NSN 5821-01-327-7399	2.5
	AUTOMATIC DIRECTION FINDER AN/ARN-149(V)				
1	I	1	Receiver R-2382/ARN149(V)1	NSN 5826-01-241-6869	5.5
2	I	1	Control C-12491/ARN149(V)1	NSN 5826-01-395-5325	1.7
3	I	1	Mount, MT-6583/ARN149(V)1	NSN 6615-01-220-1386	0.4
4	I	1	Antenna AS-4480/ARN149(V)1	NSN 5985-01-446-2574	3.1
	GYRO MAGNETIC COMPASS SET AN/ARN-43				
1	I	1	Gyro, Directional CN-998B/ASN-43	NSN 6615-00-167-9757	5.5
2	I	1	Compass Transmitter, Induction T-611A/ASN	NSN 6605-00-531-2992	1.5
3	I	1	Compensator, Magnetic Flux, CN-405/ASN	NSN 6605-00-487-4773	0.5
	TRANSPONDER SET AN/APX-100				
1	I	1	Receiver-Transmitter RT-1667A/APX-100(V)	NSN 5841-01-342-3847	6.6

3.1.4 (Cont'd)

ITEM NO.	STATUS	QTY. PER A/C	DESCRIPTION	IDENTIFICATION	UNIT WT. (LB.)
	COMMUNICATION SECURITY SET TSEC/KY-58				
1	CP	3	Control, Light Source, Remote, KY-58/Z-AHP 0N241740-1	NSN 5810-01-026-9623	2.0
2	CP	3	Speech Security Equip. TSEC/KY-58	NSN 5810-01-449-0154	4.5
	RADAR SIGNAL DETECTING SET AN/APR-39A(V)1				
1	CP	1	Detecting Control C-11308/APR-39A(V)	NSN 5841-01-205-0658	0.4
2	CP	1	Radar Signal Indicator IP-1150A/APR-39(V)	NSN 5841-01-274-4939	2.3
3	CP	1	Digital Processor CP-1597A/APR-39(V)	NSN 5895-01-395-7447	5.9
4	CP	2	Radar Receiver R-2218/APR-39(V)	NSN 5841-01-204-8266	1.8
5	CP	2	Antenna-Detector (Left) AS-3549A/APR-39(V)	NSN 5841-01-358-6775	0.6
6	CP	2	Antenna-Detector (Right) AS-3549A/APR-39(V)	NSN 5841-01-358-6774	0.6
7	CP	1	Blade Antenna AS-2890/APR-39(V)	NSN 5985-01-026-3927	0.4

3.1.4 (Cont'd)

ITEM NO.	STATUS	QTY. PER A/C	DESCRIPTION	IDENTIFICATION	UNIT WT. (LB.)
	ALQ-144 INFRARED JAMMER				
1	CP	1	Transmitter T-1360A(V)1/ ALQ-144A(V)	NSN 5865-01-323-4999	28.0
2	CP	1	Control C-10280/ALQ-144(V)	NSN 5865-01-037-1345	1.0
	M-130 CHAFF/FLARE				
1	CP	1	Dispenser Control Panel	NSN 1095-01-057-4592	1.3
2	CP	1	Electronics Module	NSN 1095-01-057-0027	3.8
3	CP	1	Payload Module	NSN 1095-01-057-0026	3.9
4	CP	1	Dispenser Module	NSN 1095-01-065-9028	5.4
	AUXILIARY EQUIPMENT				
1	CP	1	Transponder Computer, KIT-1C/TSEC ON389698-1	NSN 5810-01-273-7820	11.0
2	I	1	Mount MT-3949A/U	NSN 5975-00-935-0582	2.0
	ABSOLUTE ALTIMETER AN/APN-209(V)				
1	I	1	Receiver-Transmitter RT-1115J/APN-209(V)	NSN 5841-01-421-4162	4.5
2	I	1	Indicator, Altimeter ID-1917C/APN-209(V)	NSN 5841-01-245-9093	2.8
3	I	2	Antenna AS-3831/APN-209	NSN 5985-01-240-8668	0.7
	VOR/ILS AN/ARN-147(V)				
1	I	1	Radio Receiver R-2594/ARN-147(V)	NSN 5826-01-444-0319	8.0
2	I	1	Radio Control C-12550/ARN-147(V)	NSN 5826-01-444-0317	1.5

3.1.4 (Cont'd)

ITEM NO.	STATUS	QTY. PER A/C	DESCRIPTION	IDENTIFICATION	UNIT WT. (LB.)
	DOPPLER/GPS SYSTEM AN/ASN-128B				
1	I	1	Receiver, Radar Transmitter RT-1193A/ASN	NSN 5841-01-318-0654	10.5
2	I	1	Signal Data Converter CV-3338A/ASN-128	NSN 5895-01-399-4918	12.0
3	I	1	Computer Display Unit CP-1252C/ASN-128B	NSN 5841-01-399-5513	7.5
4	I	1	Antenna 22433-40	NSN 5985-01-422-4719	0.7
5	I	1	CIS Processor CP-2036/A	NSN 6610-01-280-9729	6.5
	DATA TRANSFER SYSTEM				
1	I	1	Data Transfer Module 162571-02-01	NSN 5935-01-291-0383	1.0
2	I	1	Cartridge, Programmable 164191-16-01	NSN 7045-01-444-7905	0.75
	ANVIS HEADS-UP DISPLAY (HUD) AN/AVS-7				
1	I	1	Signal Data Converter CV-4229(V)7/AVS-7(V) or CV-4229(V)8/AVS-7(V)	NSN 5895-01-459-3050 NSN 5895-01-459-3051	13.0
2	I	2	Display Unit SU-180/AVS-7	NSN 7025-01-362-0980	1.1
3	I	1	Converter Control Unit C-12293/AVS-7	NSN 5895-01-361-9003	1.0
	ELASTOMERIC ROD END BEARINGS				
1	I	4	Upper Main Rod Bearings SB-7110-101	NSN 3120-01-417-0133	2.5
2	I	4	Lower Main Rod Bearings SB-7111-101	NSN 3120-01-417-0135	1.1
3	I	4	Tail Inboard Rod Ends SB-7112-101	NSN 3120-01-417-0136	0.3
4	I	4	Tail Outboard Rod Ends SB-7112-102	NSN 3120-01-417-0134	0.3

3.1.4 (Cont'd)

ITEM NO.	STATUS	QTY. PER A/C	DESCRIPTION	IDENTIFICATION	UNIT WT. (LB.)
	SINCGARS				
1	I	2	SINCGARS Mount MT-6374/ARC-201(V)	NSN 5975-01-231-5668	2.8
2	I	1	Battery Box CY-8515/ARC-201(V)	NSN 6160-01-266-7596	1.5 (incl. batts)
3	I	1	IFM Amplifier AM-7189A/ARC	NSN 5895-01-188-3332	10.0
4	I	1	SINCGARS CDU C-11466A/ ARC-201A(V)	NSN 5821-01-306-2245	4.0
5	I	1	SINCGARS R/T RT-1477C/ ARC-201C(V)	NSN 5821-01-387-0593	10.0
6	CP	1	SINCGARS CDU C-11466A/ ARC-201A(V)	NSN 5821-01-306-2245	4.0
7	CP	1	SINCGARS R/T RT-1477C/ ARC-201C(V)	NSN 5821-01-387-0593	10.0
	ARMAMENT				
1	CP	2	Machine Gun, 7.62mm, M60D	NSN 1005-00-909-3002	24.7
2	CP	2	Ejection Control Bag	NSN 1005-00-903-1088	4.5
3	CP	2	Box, Ammunition	NSN 1005-00-903-1090	2.4
	MISCELLANEOUS				
1	I	2	Displacement Gyro CN-1314/A or CN-1314/E	NSN 6615-00-453-5670 NSN 6615-01-294-1170	5.0
2	I	3	Kit, First Aid IRR A-6882	NSN 6545-00-919-6650	1.8
3	I	2	Fire Extinguisher MIL-E-52031D(ME) or BBE2879-1-A	NSN 6830-00-555-8837 or NSN 4210-01-419-5562	7.5

3.1.4 (Cont'd)

ITEM NO.	STATUS	QTY. PER A/C	DESCRIPTION	IDENTIFICATION	UNIT WT. (LB.)
	MISCELLANEOUS				
4	I	1	Crash Axe 56D6221	NSN 4210-00-243-0863	3.5
5	I	2	Pilot/CoPilot Seat 100900-11	NSN 1680-01-494-3019	116.0
6	*	1	Adapter, Fuel Drain 70307-03018-102	NSN 4730-01-102-8742	0.1
7	*	4	Lock Assy, Blade Tiedown 70700-20369-041	NSN 1730-01-084-5239	1.9
8	*	1	Aircraft Engine Cover, Left Hand 89SDSCC-D-0161-1	NSN 1730-01-330-5100	3.0
9	*	1	Aircraft Engine Cover, Right Hand 89SDSCC-D-0161-2	NSN 1730-01-330-5101	3.0
10	*	1	Plug Assy, APU Exhaust 70700-20509-041	NSN 5340-01-128-4459	1.0
11	*	1	Cover Assy, Oil Cooler 70700-20511-041	NSN 1560-01-129-7337	2.8
12	*	1	Blade Fold Set 70700-20412-011	NSN 1560-01-082-9202	214.0
13	*	2	Cover, Pitot Tube 70700-20460-041	NSN 1560-01-129-1259	0.2
14	I	2	Equipment Log Book MIL-B-43064	NSN 7510-00-889-3494	
15	I	1	Sealed Lead Acid Battery (SLAB), D8565/11-1	NSN 6140-01-286-6294	34.8

* Flyaway Support Equipment.

3.1.5 Government Developed Engineering Changes. ECPs 0543, 0548, 0549, and 0550 incorporate engineering changes installed by Maintenance Work Orders (MWOs) which had been developed by the government for fielded aircraft. Compliance with the requirements of this Aircraft Specification by these ECPs and by subsystems affected by these ECPs shall be limited to that which has been substantiated by the government.

3.1.6 Operational and Organizational Concepts

3.1.6.1 Operational Concepts. The UH-60L shall be operated in forward areas to provide movement of combat troops and their organic mission essential equipment in the assault and to resupply those units while in contact. Secondary UH-60L missions shall include combat support and combat service support for other units and agencies.

3.1.6.1.1 Operating Conditions. The UH-60L shall incorporate an avionics capability as defined in 3.1.4 and 3.7.10 operable under the following conditions:.

a. Visual conditions, day and night including an NVG (AN/AVS-7) compatible capability, up to and including the aircraft service ceiling using single aircraft or a formation of aircraft.

b. Instrument conditions, day and night, up to and including the aircraft service ceiling using single aircraft (excludes external loads).

c. Instrument approaches to terminal area equipped with precision and nonprecision landing aids compatible with the avionics configuration of the aircraft. (Excluding external loads.)

3.1.6.1.2 Operations to Enhance Survivability. To enhance survivability, the UH-60L shall be capable of conducting low level flight during daytime visual conditions using limited navigational equipment, wire strike protection as described in 3.2.2.4.4.9 and pilotage conducted in accordance with the Operator's Manual TM 1-1520-237-10.

3.1.6.1.3 Areas of Operation. The vertical flight performance of the UH-60L shall allow operation with the specified payload over a portion of the world's surface thereby augmenting the Army's strategic and tactical capability. Additionally, the capability to transport heavier loads at reduced endurance or at heavier gross weight with reduced performance and load factor shall permit flexibility to meet specific missions or situation demands.

3.1.6.1.4 Climatic Conditions. The UH-60L shall be capable of operation under climatic conditions up to and including moderate turbulence and, moderate icing. The UH-60L shall be capable of operation within a range of ambient temperature from -25°F to +125°F without the winterization kit and from -65°F to +125°F with the winterization kit. See 3.7.16.2 for winterization kit. See 3.2.5 for specific environmental requirements.

3.1.6.2 Organizational Concepts

3.1.6.2.1 Flight Crew. The UH-60L flight crew shall consist of a pilot, copilot and crewchief/gunner. Air ambulance crews shall consist of pilot, copilot, crewchief, and medical corpsman. The basic crew may be augmented with a fourth crewmember (gunner) in lieu of the 11th troop.

3.2 Characteristics

3.2.1 Performance Characteristics. The aircraft shall be capable of performing the missions specified herein.

3.2.1.1 Aerial Vehicle

3.2.1.1.1 Performance Ground Rules. The performance requirements shall be met when the aircraft, in delivery condition, is operating at its primary mission gross weight as defined in 3.2.2.1.5. Additionally:

a. General Electric T700 computer deck number 88244, dated 15 April 1988, shall be used to provide installed engine performance. Customer bleed pressure and temperature data shall be obtained from the "Status 3" engine curves provided by General Electric in IFM GE-SA-12-U1065. Inlet and exhaust losses are shown in Figures 4 through 6. Engine specification performance values shall not be exceeded for aircraft performance determination.

b. The Hover Infrared Suppression System (HIRSS) is in suppressive mode.

c. Specification engine fuel consumption shall be increased by three percent.

3.2.1.1.1 (Cont'd)

d. All performance shall be met at a constant normal operating rotor speed except for emergency OEI take off requirements.

e. Power required shall be based on the most adverse center of gravity limit for the primary mission gross weight from the standpoint of airframe drag.

f. Crew and passenger environmental control system shall be in the appropriate mode of operation.

g. Electrical loads shall be assumed to be the maximum which will be experienced for normal daylight operations, 13 horse power.

h. All doors and windows shall be closed.

i. JP–4 fuel with a LHV = 18,340 BTU/lb shall be used.

j. The ESSS, the M–130 Chaff Dispenser Assembly, the AN/ALQ–144( )(V) Infrared Jammer Transmitter, and their provisions shall not be included as part of the aircraft aerodynamic configuration for which flight performance is determined.

k. The stabilator angle shall be set at the design value for each flight condition.

l. The term "warranty test purposes" refers to requirements of the Performance Warranty Clause of this contract.

3.2.1.1.1.1 Primary Mission. Specifically the following performance capabilities shall be met with the aircraft operating under the preceding ground rules at 4000 feet pressure altitude under zero wind and 95°F temperature conditions unless otherwise specified.

a. A minimum vertical rate of climb (zero airspeed in all horizontal directions) from an out–of–ground effect hover, utilizing not more than 95 percent of installed intermediate power (Ref 6.3.3) of 787 feet per minute. For warranty test purposes a value equal to or greater than 609 feet per minute shall be deemed compliant.

b. A cruise speed, with not more than maximum continuous power (Ref. 6.3.4), of not less than 152 knots true airspeed (KTAS). For warranty test purposes a value equal to or greater than 149 Knots True Airspeed (KTAS) shall be deemed compliant.

3.2.1.1.1.1 (Cont'd)

c. An endurance of not less than 2.27 hours based on the following sequence of mission segments. Gross weight shall only be decreased for fuel burn off throughout the mission. Mission payload shall remain constant for all segments including the reserve segment. For warranty test purposes a value equal to or greater than 2.17 hours shall be deemed compliant.

(1) Eight minutes ground operation at idle power.

(2) Twenty minutes operation at maximum continuous power.

(3) Eighty minutes cruise at 145 knots true airspeed (KTAS).

(4) Reserve fuel.

3.2.1.1.1.2 Alternate Endurance. Fuel capacity shall be sufficient to provide an alternate endurance of 1.93 hrs IAW 3.2.1.1.1.1.C mission segments at sea level, standard day conditions with 11 troop payload. For this alternate endurance mission the gross weight is defined as the primary mission gross weight but with full fuel.

3.2.1.1.1.3 One Engine Inoperative Performance. The following performance characteristics shall be met at primary mission gross weight of 3.2.2.1.5, using not more than intermediate power on the remaining engine. Authorized changes to the values of the characteristics stated in subparagraphs a and b shall be as tabulated in Appendix III, Configuration Audit Table 3 herein.

a. A level flight speed at 4000 feet, 95°F of not less than 111 KTAS. For warranty test purposes a value equal to or greater than 108 KTAS shall be deemed compliant.

b. A service ceiling (rate of climb 100 feet/minute) of not less than 5653 feet pressure altitude with an ambient temperature of 95°F. For warranty test purposes a value equal to or greater than 4753 feet pressure altitude with an ambient temperature of 95°F shall be deemed compliant.

c. Shall be capable of making a safe landing at 4000 feet and 95°F.

d. Shall be capable of an IGE takeoff from a hover with wheels 2 feet off the ground at 4,000 feet and 95°F at the primary mission gross weight less the sum of payload and 25 percent of the primary mission of fuel. For this requirement, rotor speed may vary from 100% RPM, but shall be constant throughout the maneuver. For warranty test purposes the primary mission gross weight less the sum of payload and 87 percent of the primary mission fuel shall be used to demonstrate compliance.

3.2.1.1.1.4 Performance Curves. The estimated performance characteristics are presented in Figures 7 through 28 in terms of true air speed and constant rotor tip speed except where noted. These characteristics are based on the most adverse center–of–gravity limit from the standpoint of aircraft performance and in all other respects in accordance with the ground rules of paragraph 3.2.1.1.1. Engine torque is limited to 100% (2828 hp) when operating at airspeeds of 80 kts or more and to 120% (3400 hp) below 80 kts.

3.2.1.1.1.4.1 Design Gross Weight. The design gross weight referenced for performance capabilities shall be 16,450 pounds.

3.2.1.1.1.5 Maneuverability. The aircraft shall provide the following capabilities at 4,000 feet pressure altitude, 95°F temperature, and at design gross weight.

a. Standard rate (three degrees per second) sustained turns throughout the airspeed envelope up to the maximum speed for level flight. For that portion of this envelope where a power deficiency exists during the turn, airspeed reduction during the turns are acceptable provided such a reduction does not extend below the speed for maximum continuous power.

b. Accomplishing a vertical displacement of 200 feet from its established flight path within a given distance of 1,100 feet (measured from point of pilot's initial control input) at 150 KTAS. The same maneuver and distances apply also for a lateral displacement of 200 feet.

c. From a level unaccelerated flight condition at 150 KTAS it shall be possible to attain, within 1.0 second from the initial control input, a sustained load factor of 1.75g in a symmetrical pull–up. Following this load factor buildup, it shall be possible to maintain a minimum load factor of 1.75 g for 3.0 seconds after the initial attainment of 1.75 g. Airspeed at the end of the 1.75g, 3.0 seconds duration segment of the maneuver shall not be less than 120 KTAS. Also, from a level unaccelerated flight condition at 150 KTAS, it shall be possible to attain, within 1.0 second from the initial control input, a sustained load factor of 0.0g in a pushover. Following the attainment of this load factor it shall be possible to maintain a load factor of 0.0g for 2.0 seconds. At no time during this maneuver shall it be necessary to manipulate the collective pitch purely to maintain the aircraft structural integrity; however, collective movement is otherwise authorized. At no time during either the pull–up or pushover maneuvers described above shall angular deviations in roll and yaw greater than +10° from the initial unaccelerated level flight conditions be permitted. The above stated requirements are to determine that the requirements of b are attainable.

3.2.1.1.2 Aerodynamics. The aerodynamics of the aircraft shall not restrict pilot desired attainment of any flight condition within the aerodynamic design envelope shown in Figures 29 and 30. Maximum aerodynamic lift envelopes are shown in Figures 31 and 32.

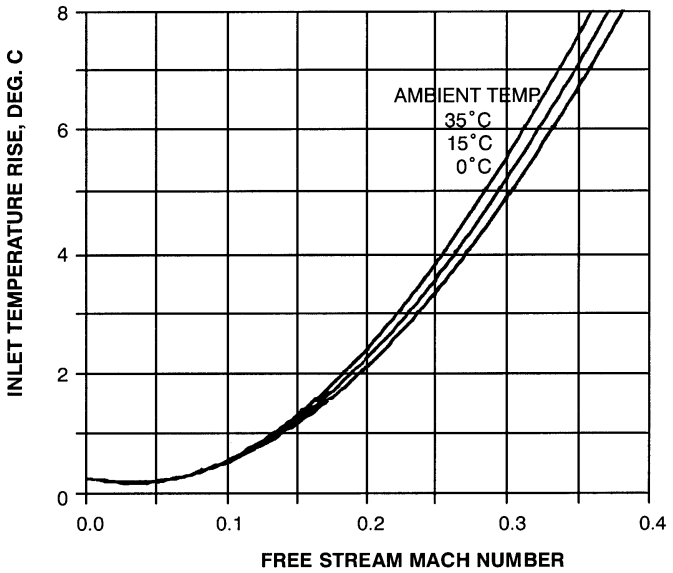

FIGURE 4. INLET RAM RECOVERY

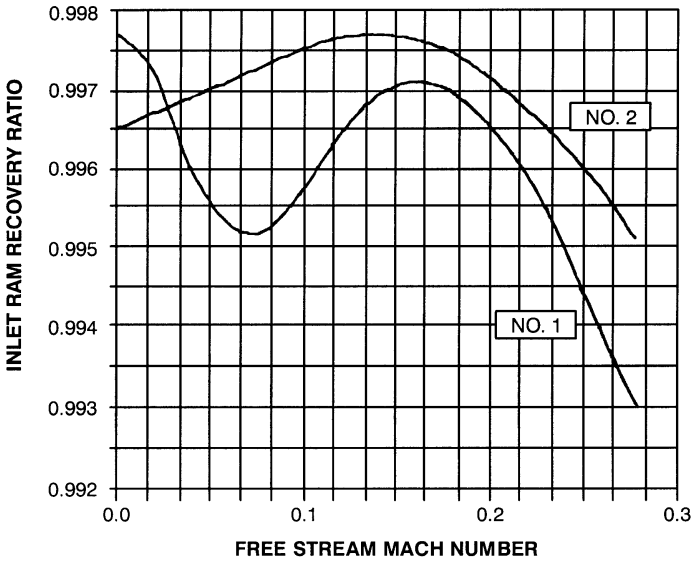

FIGURE 5. INLET TOTAL TEMPERATURE RISE

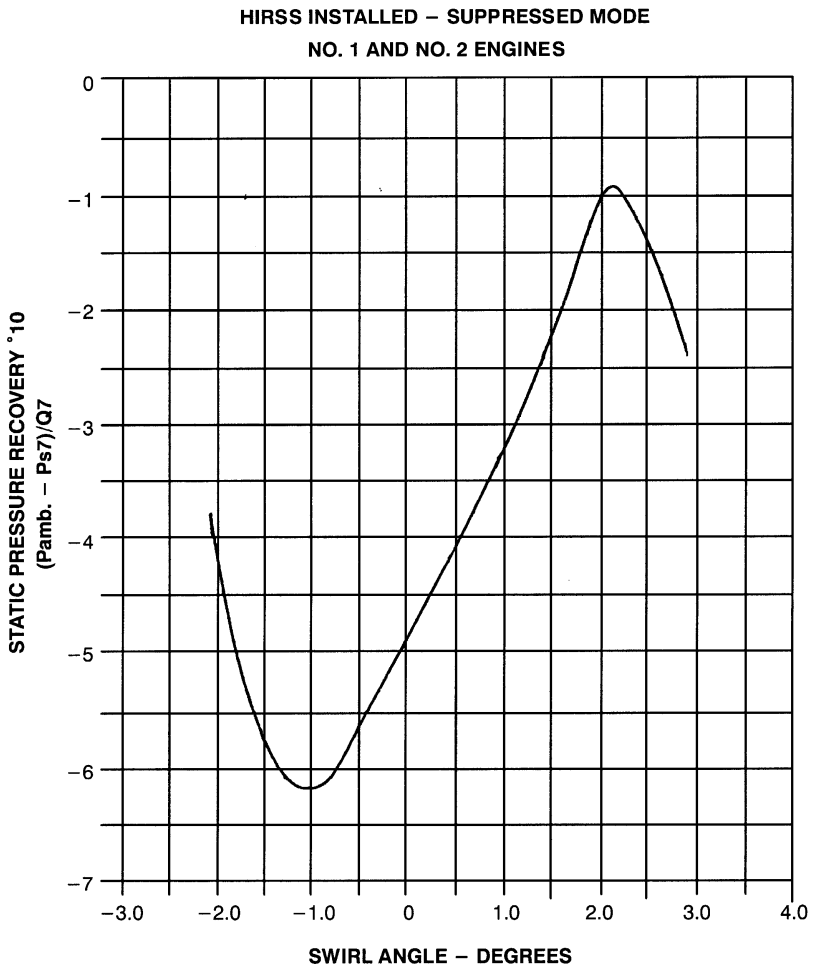

FIGURE 6. EXHAUST STATIC PRESSURE RECOVERY VS SWIRL ANGLE

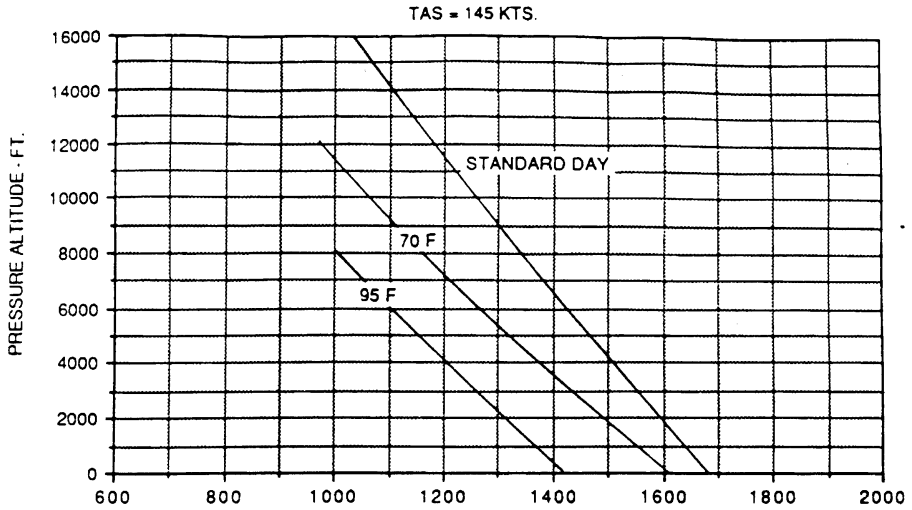

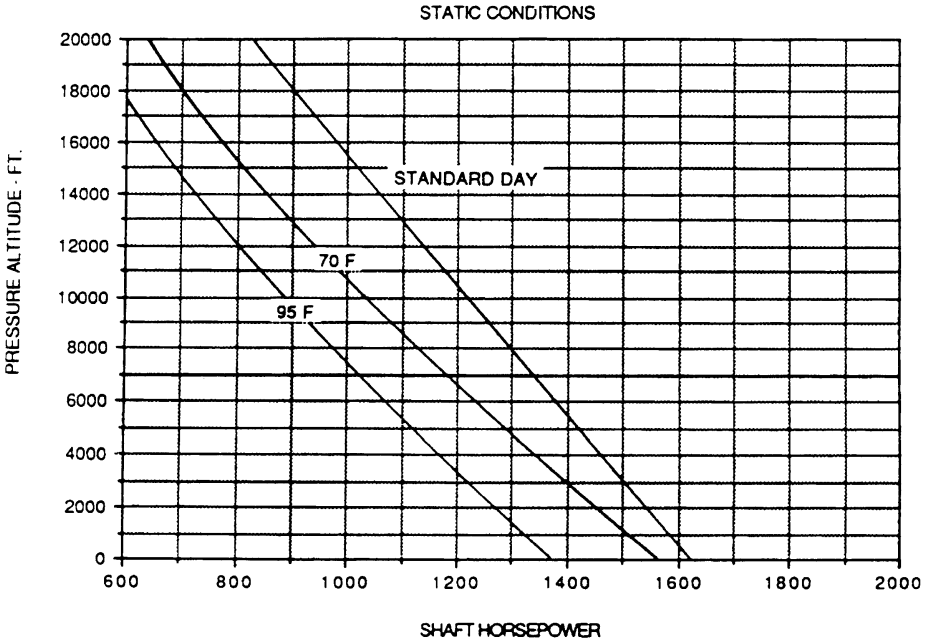

FIGURE 7. MAXIMUM CONTINUOUS POWER AVAILABLE VS ALTITUDE

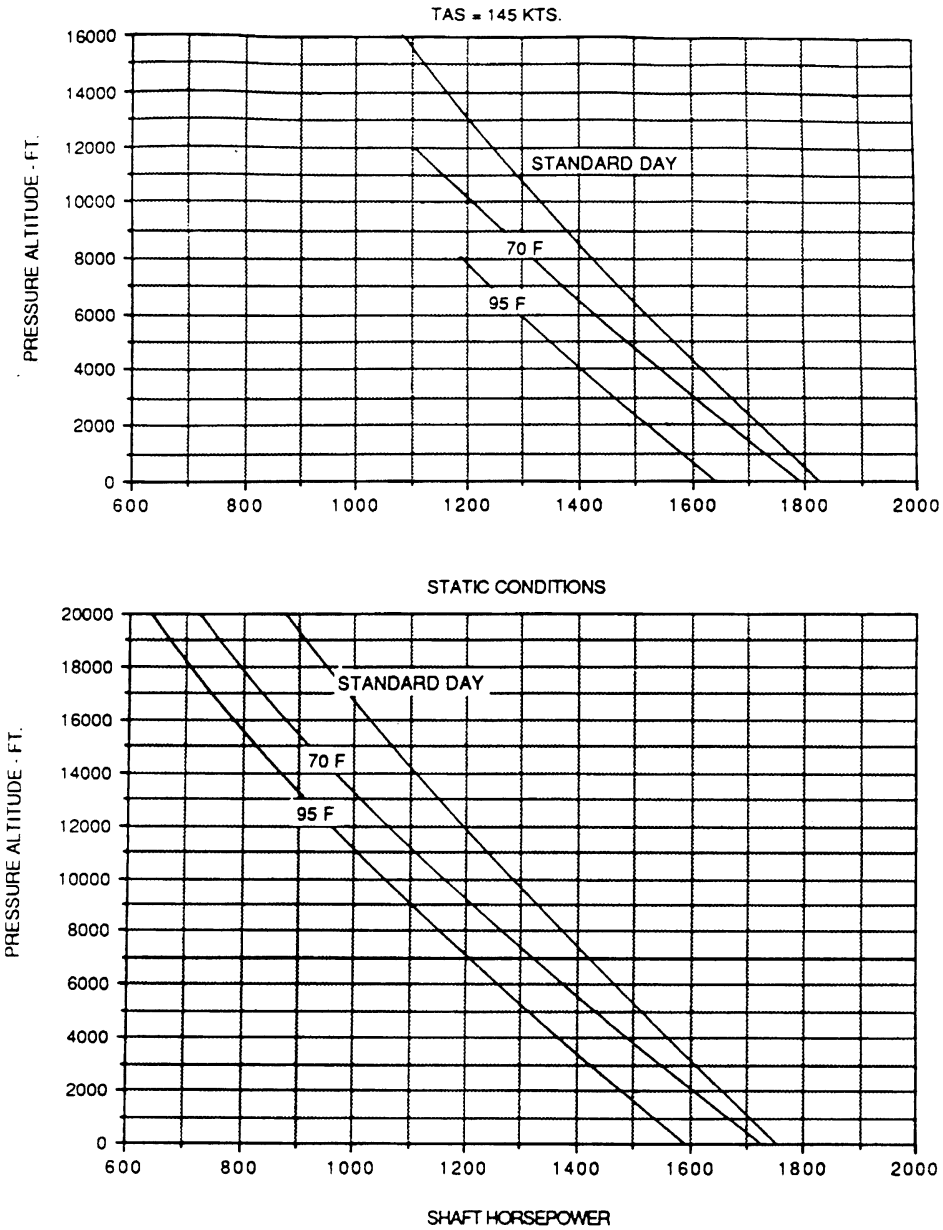

FIGURE 8. INTERMEDIATE POWER AVAILABLE

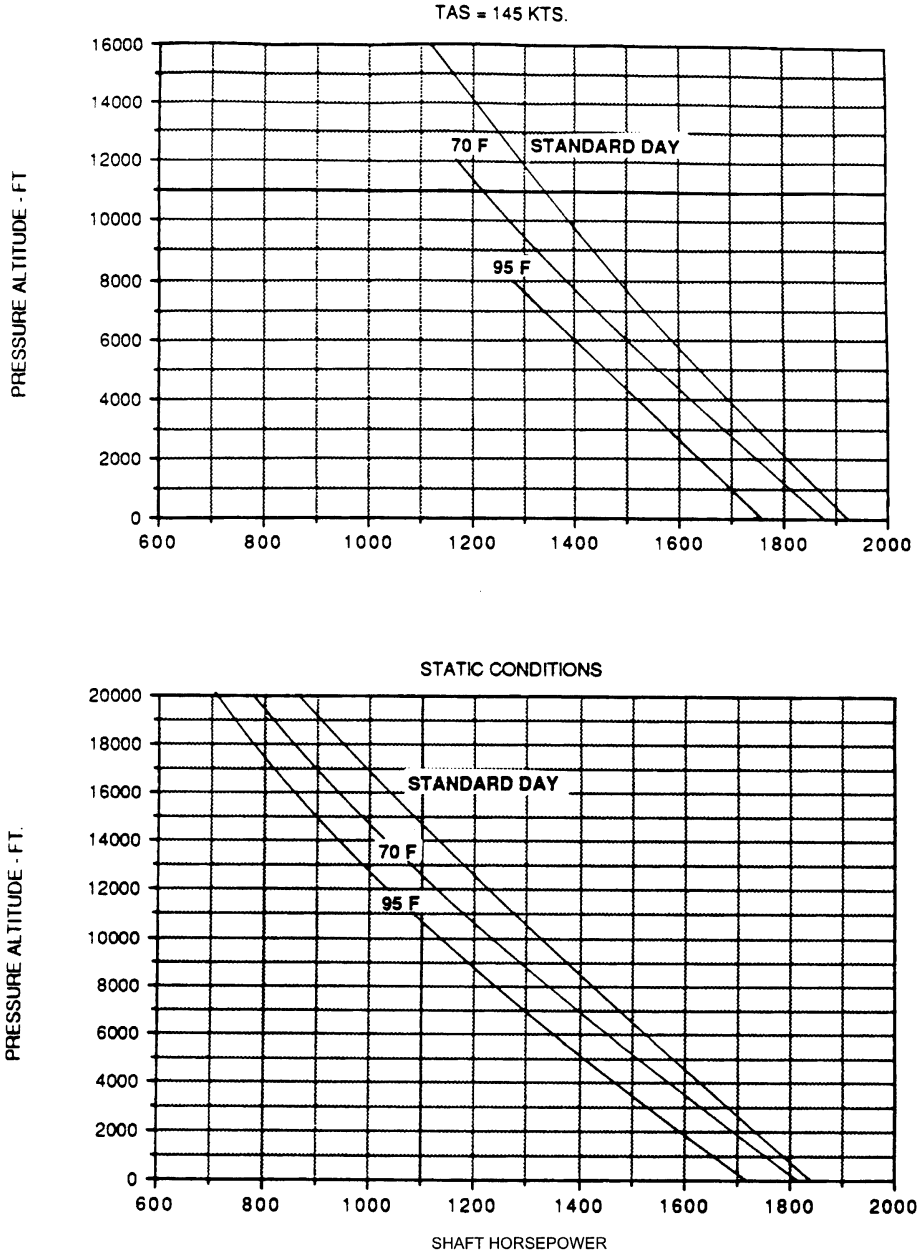

FIGURE 9. MAXIMUM POWER AVAILABLE

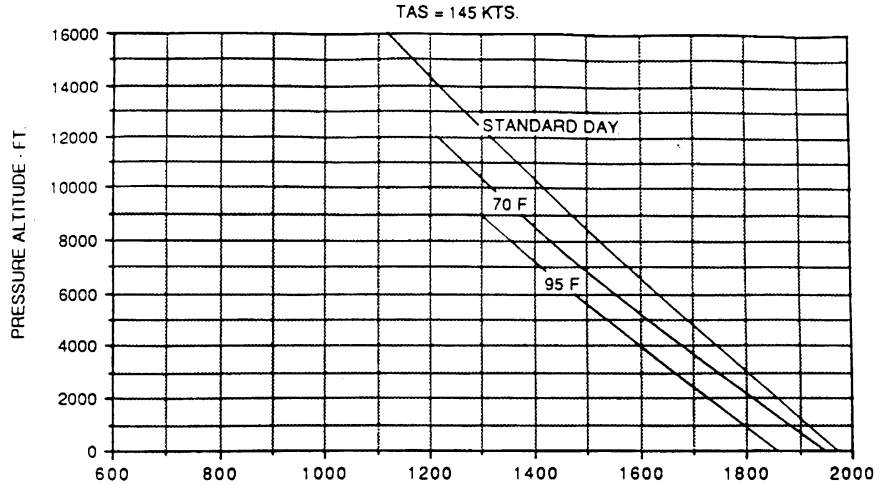

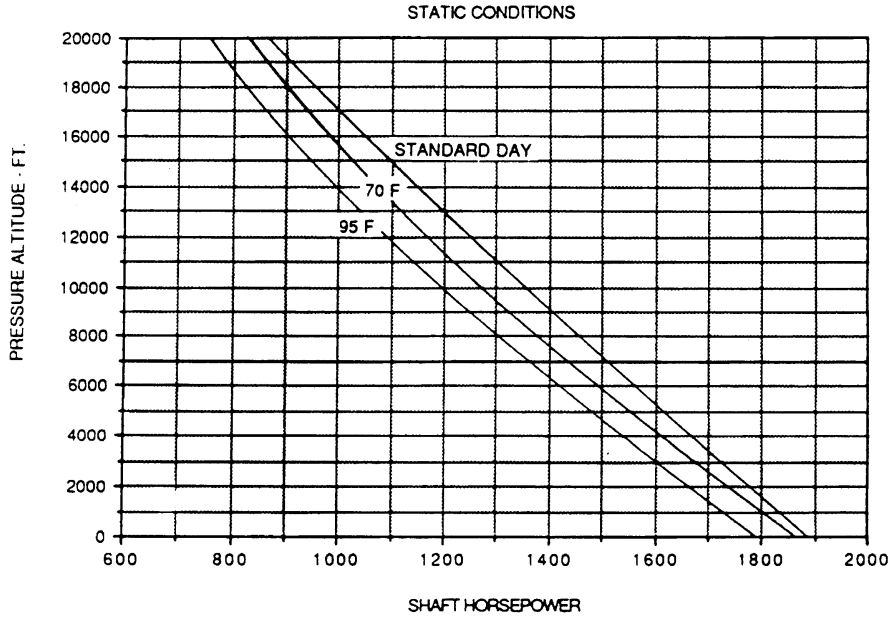

FIGURE 10. CONTINGENCY POWER AVAILABLE

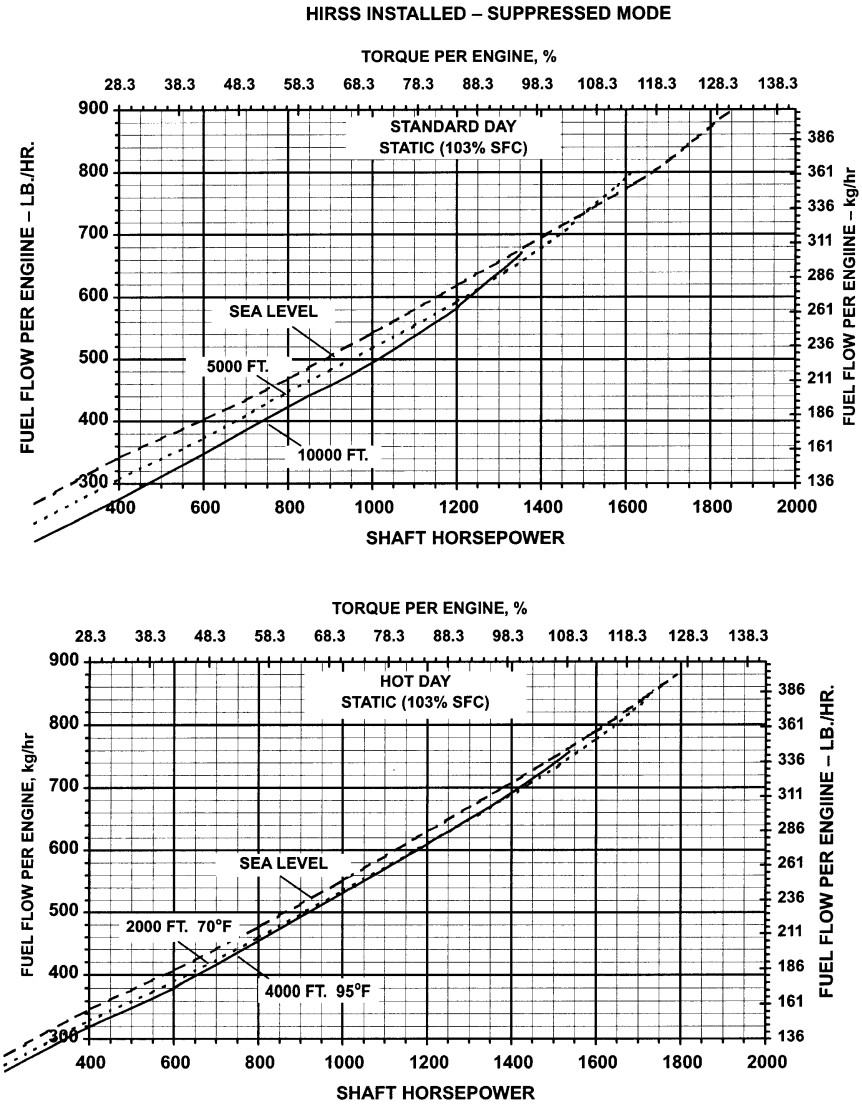

FIGURE 11. INSTALLED FUEL FLOW

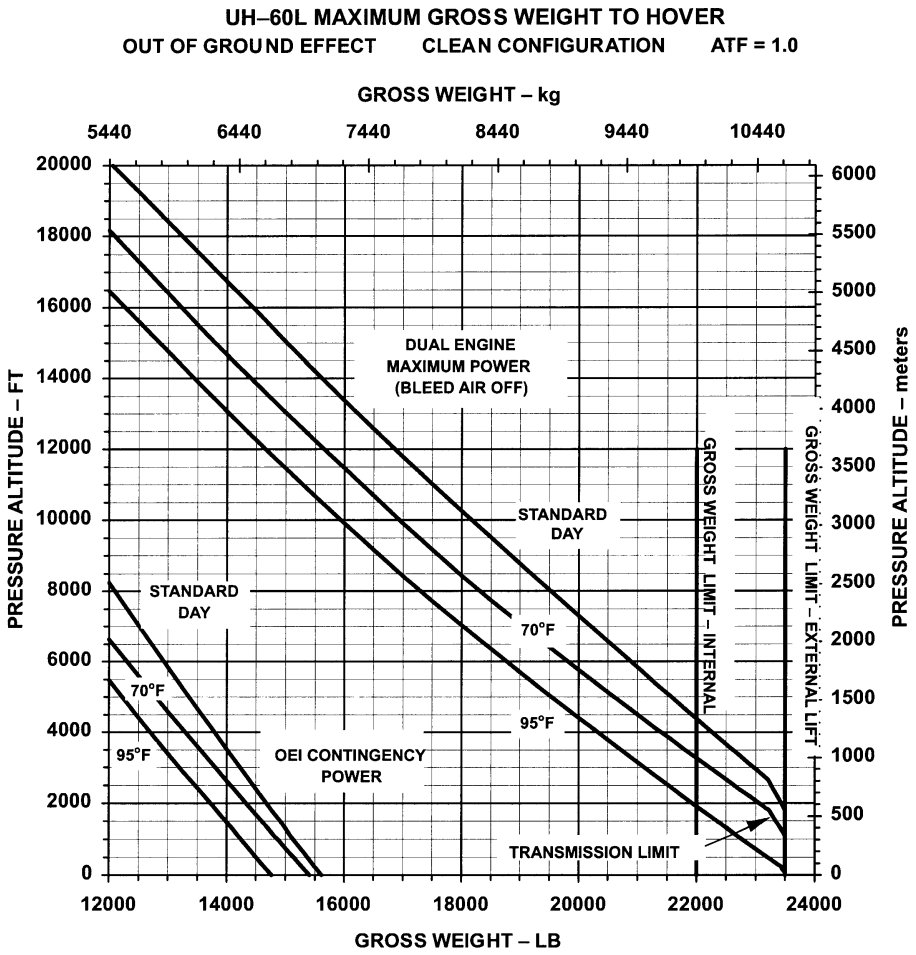

FIGURE 12. OGE HOVER CEILINGS

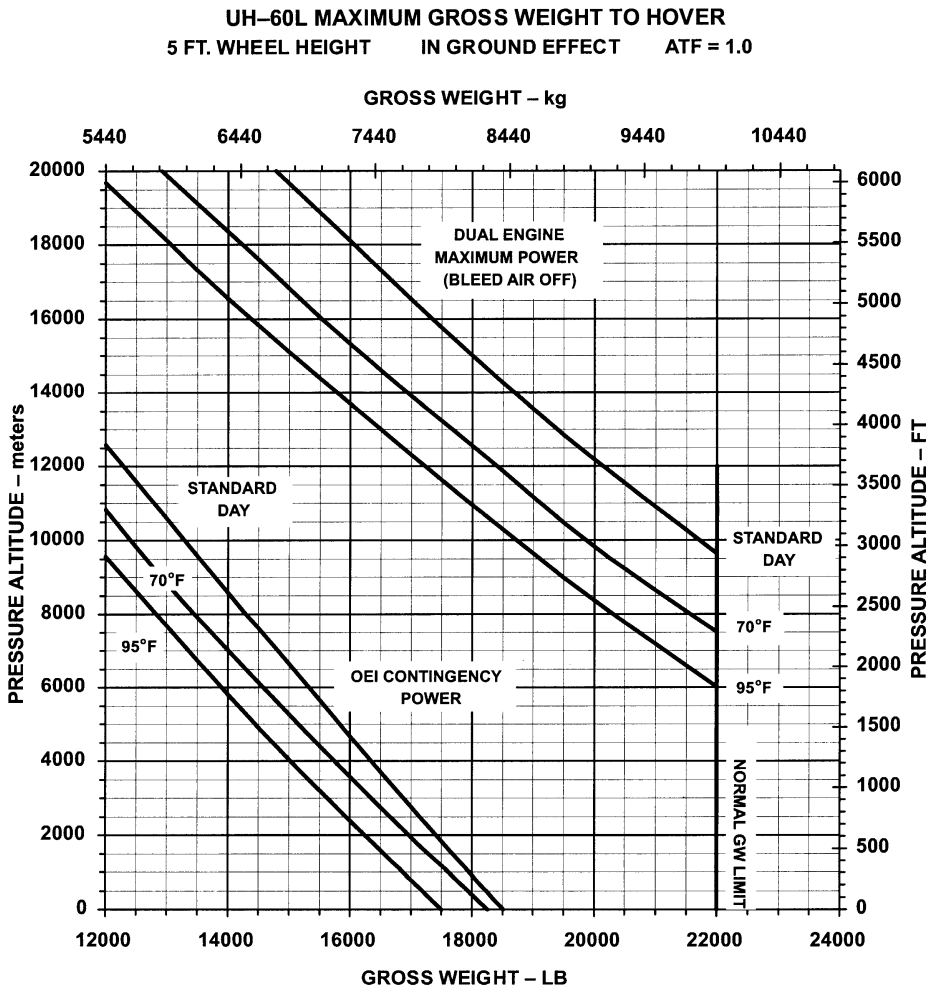

FIGURE 13. IGE HOVER CEILINGS

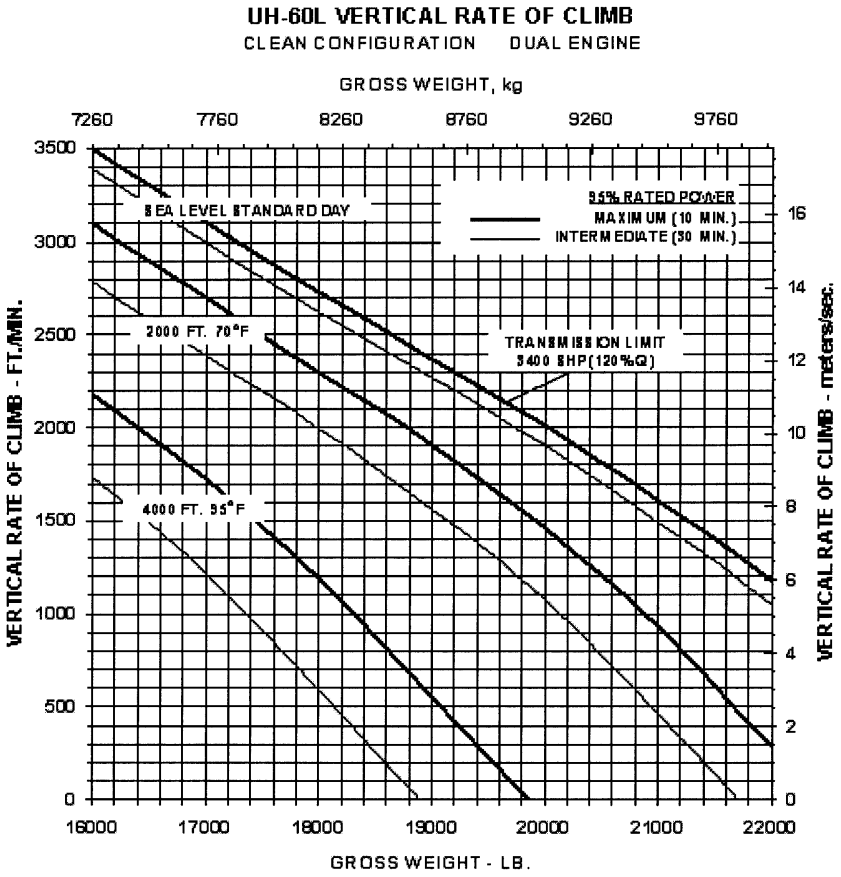

FIGURE 14. VERTICAL RATE OF CLIMB

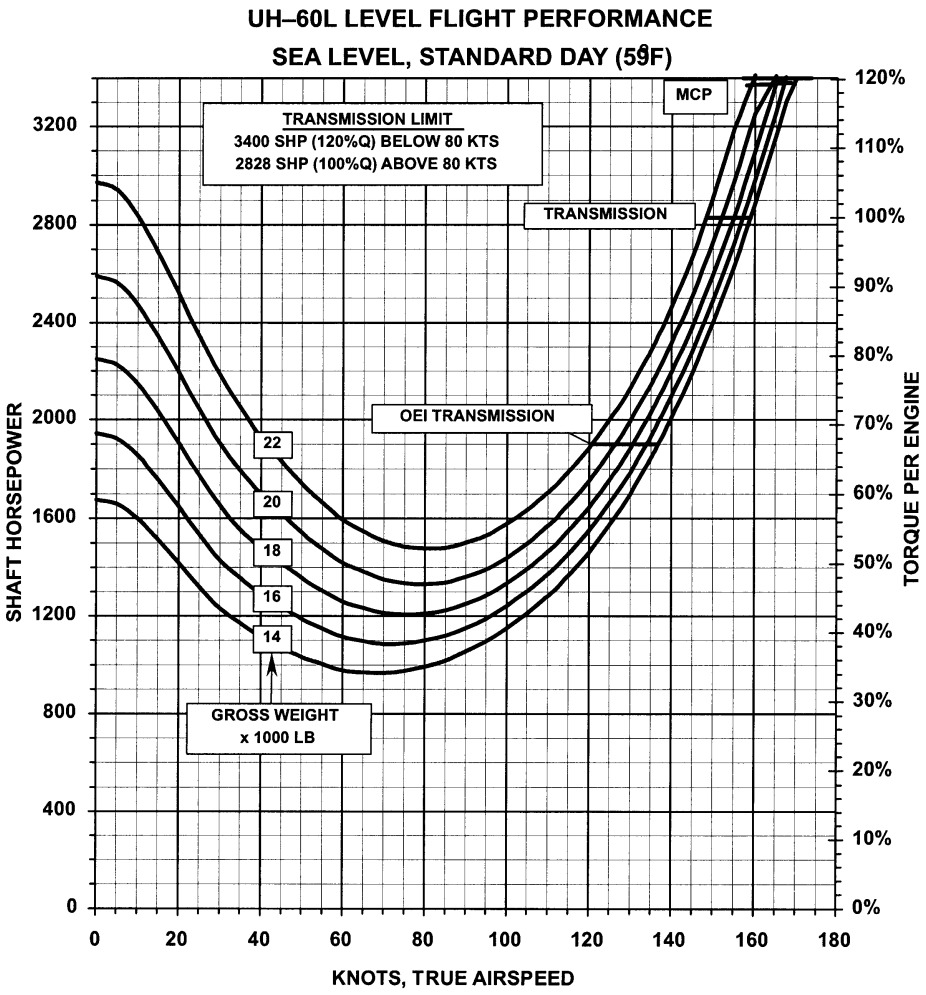

FIGURE 15. POWER REQUIRED IN LEVEL FLIGHT; SEA LEVEL STANDARD DAY

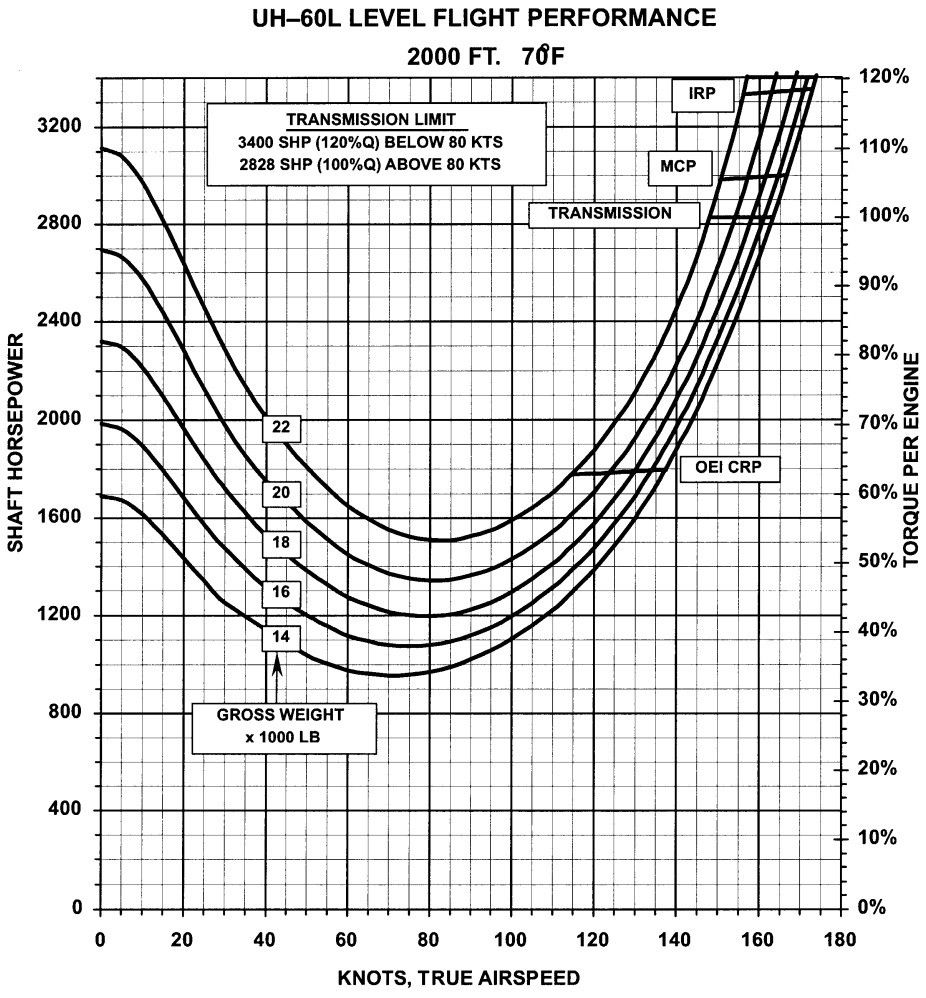

FIGURE 16. POWER REQUIRED IN LEVEL FLIGHT; 2000 FT., 70°F

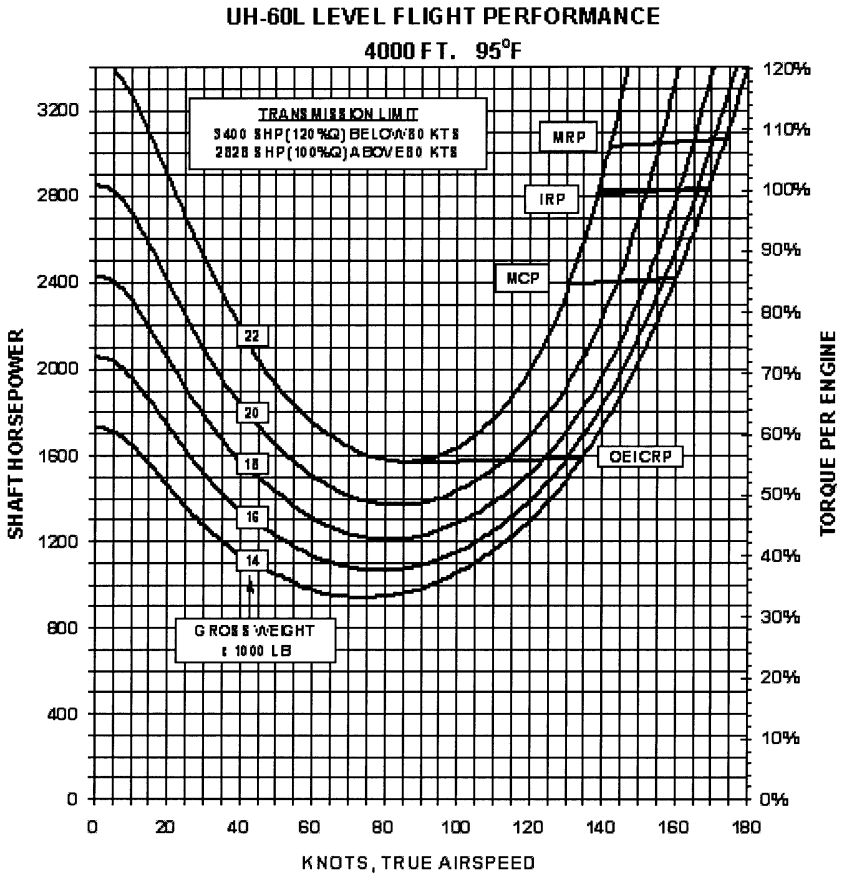

FIGURE 17. POWER REQUIRED IN LEVEL FLIGHT; 4,000 FT., 95°F

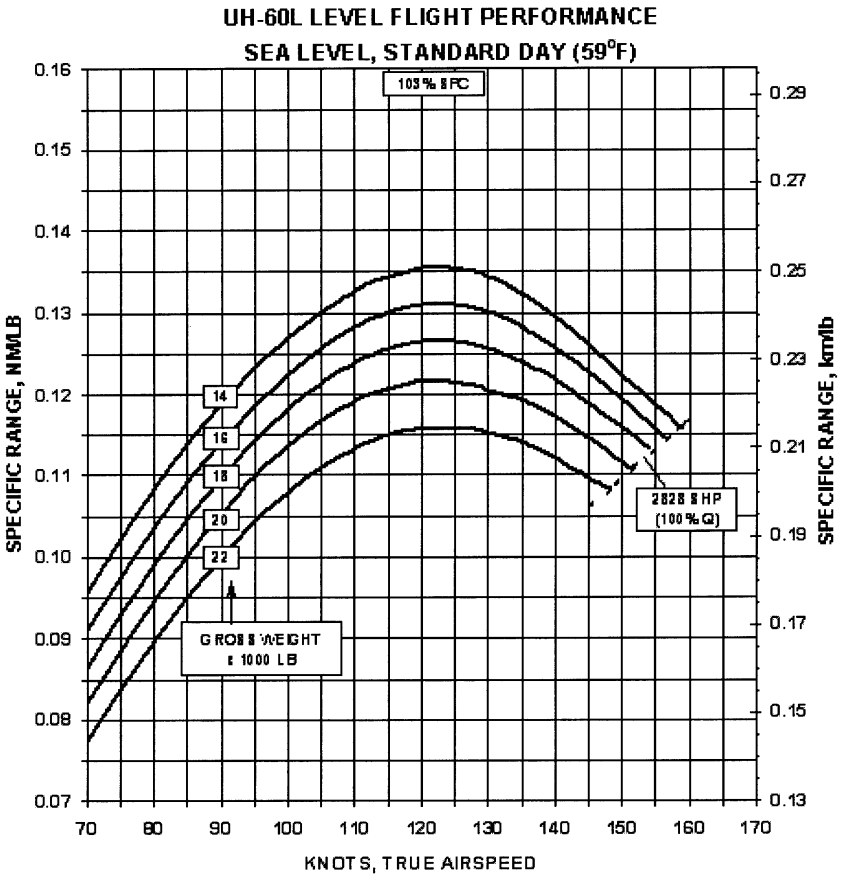

FIGURE 18. SPECIFIC RANGE IN LEVEL FLIGHT; SEA LEVEL, STANDARD DAY

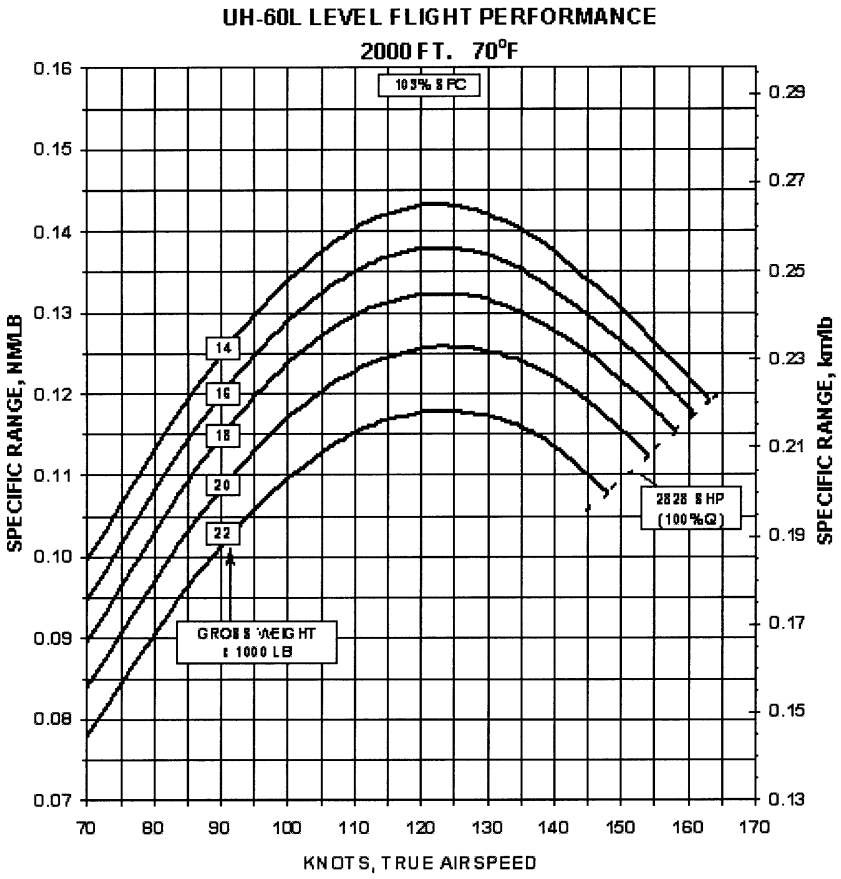

FIGURE 19. SPECIFIC RANGE IN LEVEL FLIGHT; 2000 FT., 70°F

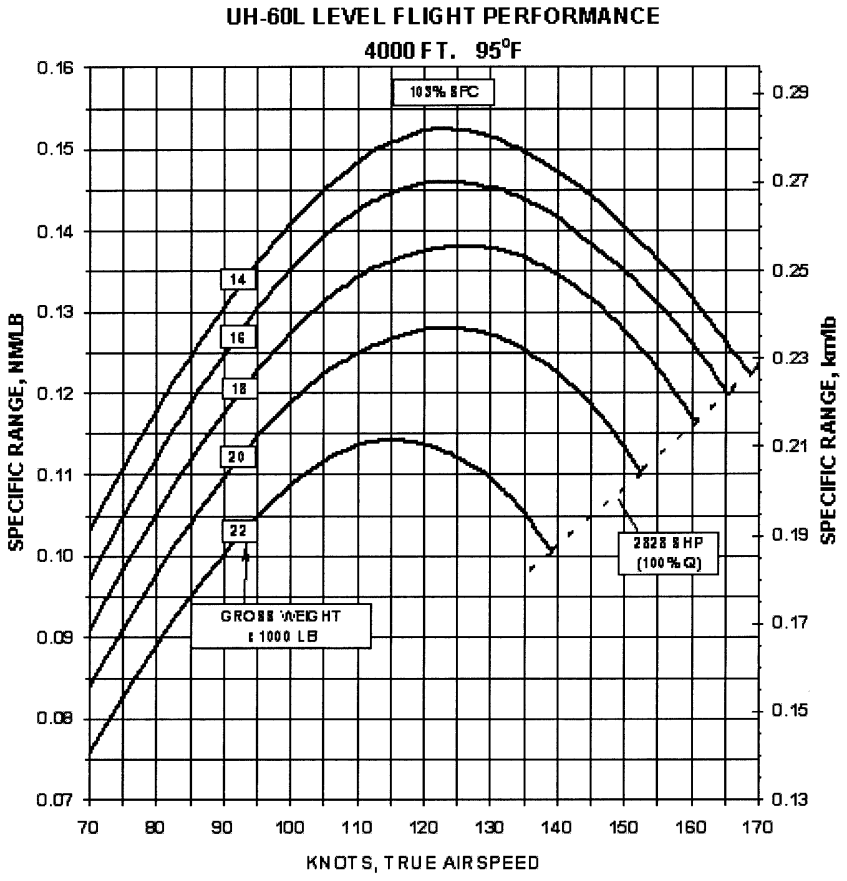

FIGURE 20. SPECIFIC RANGE IN LEVEL FLIGHT; 4000 FT., 95°F

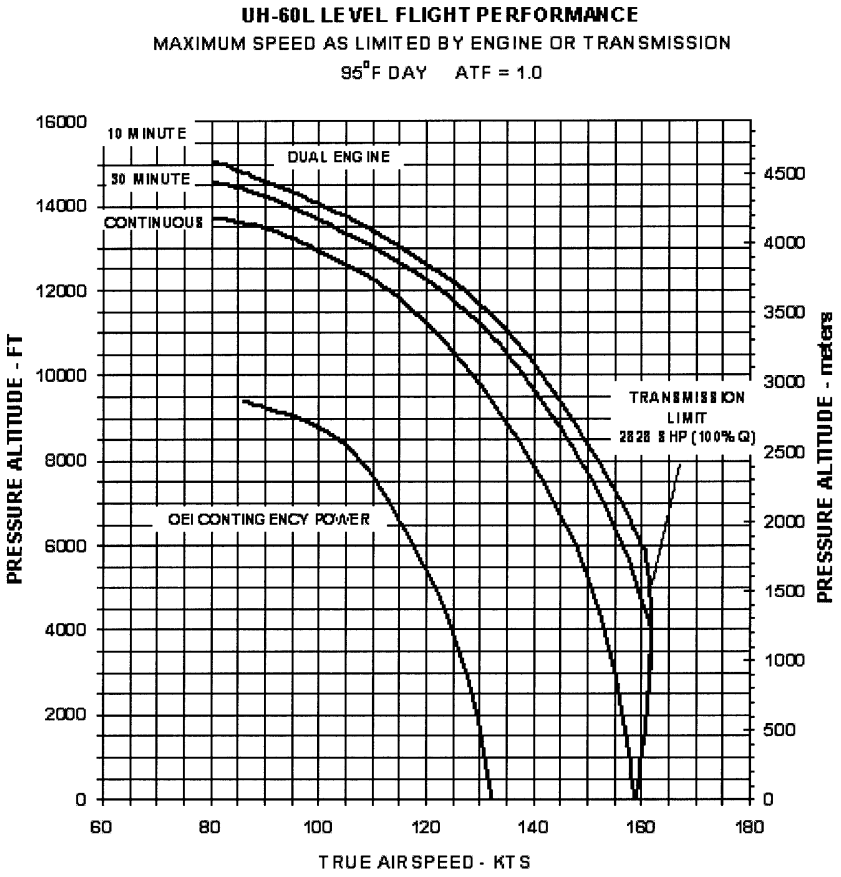

FIGURE 21. MAXIMUM SPEED AT 17706 LB., 95°F

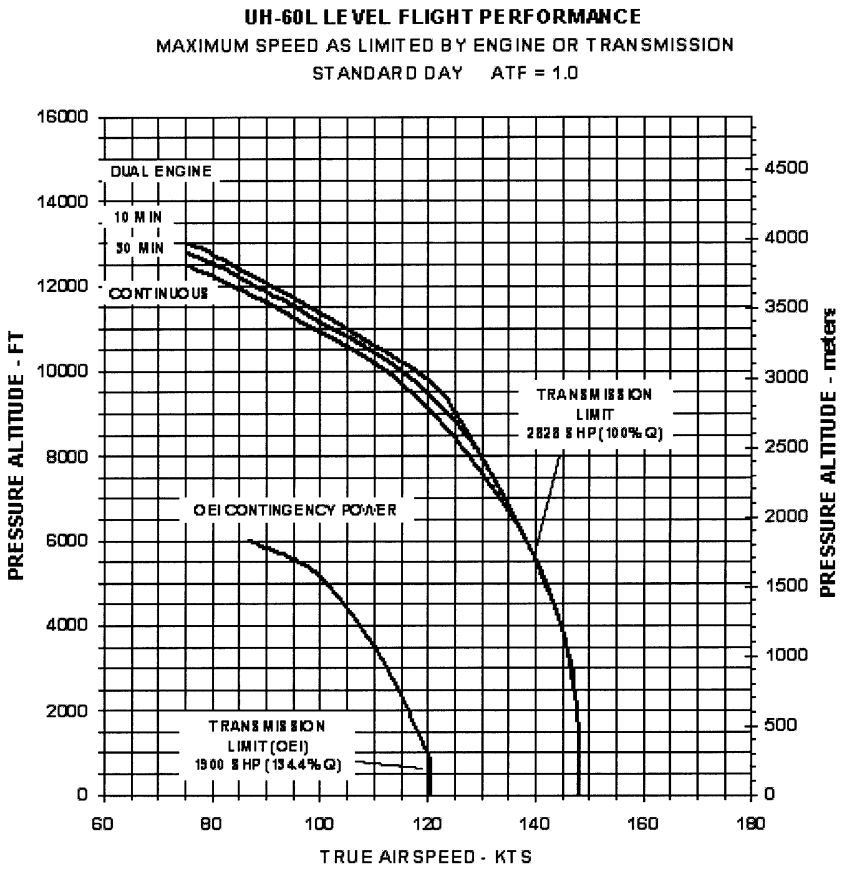

FIGURE 22. MAXIMUM SPEED AT 22000 LB., STANDARD DAY

INTERNAL PAYLOAD MISSION AT SEA LEVEL, 59°F

103% SFC
8 MIN: GROUND IDLE
2 MIN: IRP TAKE OFF
CRUISE @ SPEED FOR 99% BEST RANGE
30 MIN: RESERVE @ SPEED FOR 99% BEST RANGE

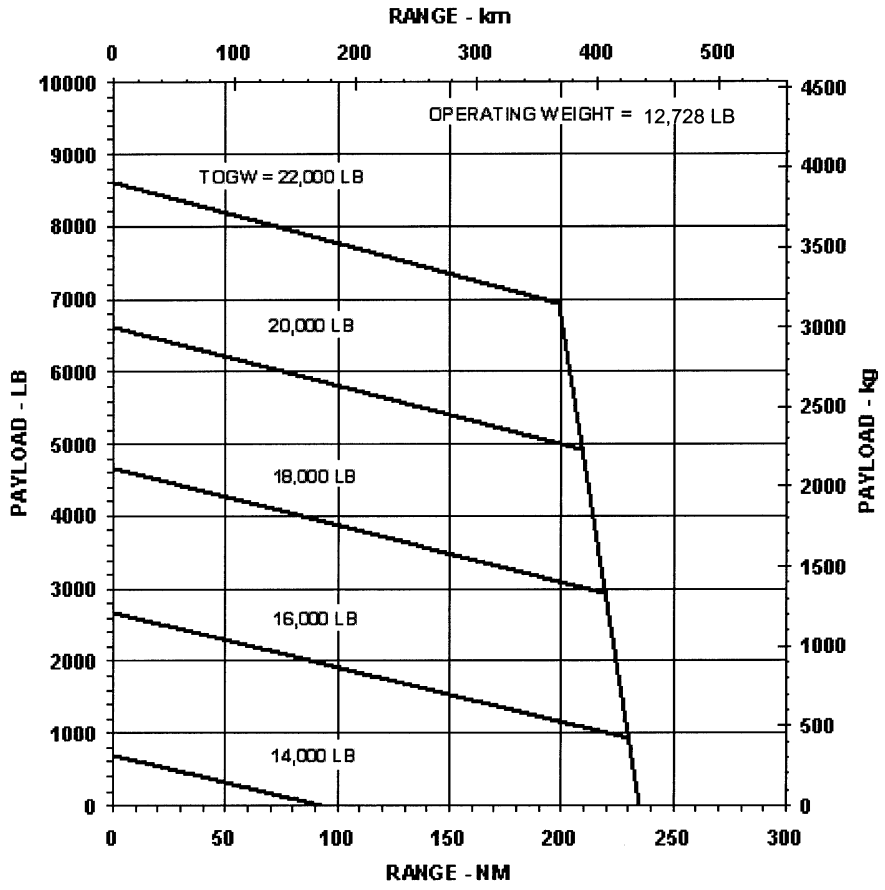

FIGURE 23. INTERNAL PAYLOAD/RADIUS CAPABILITY/SEA LEVEL, STANDARD DAY

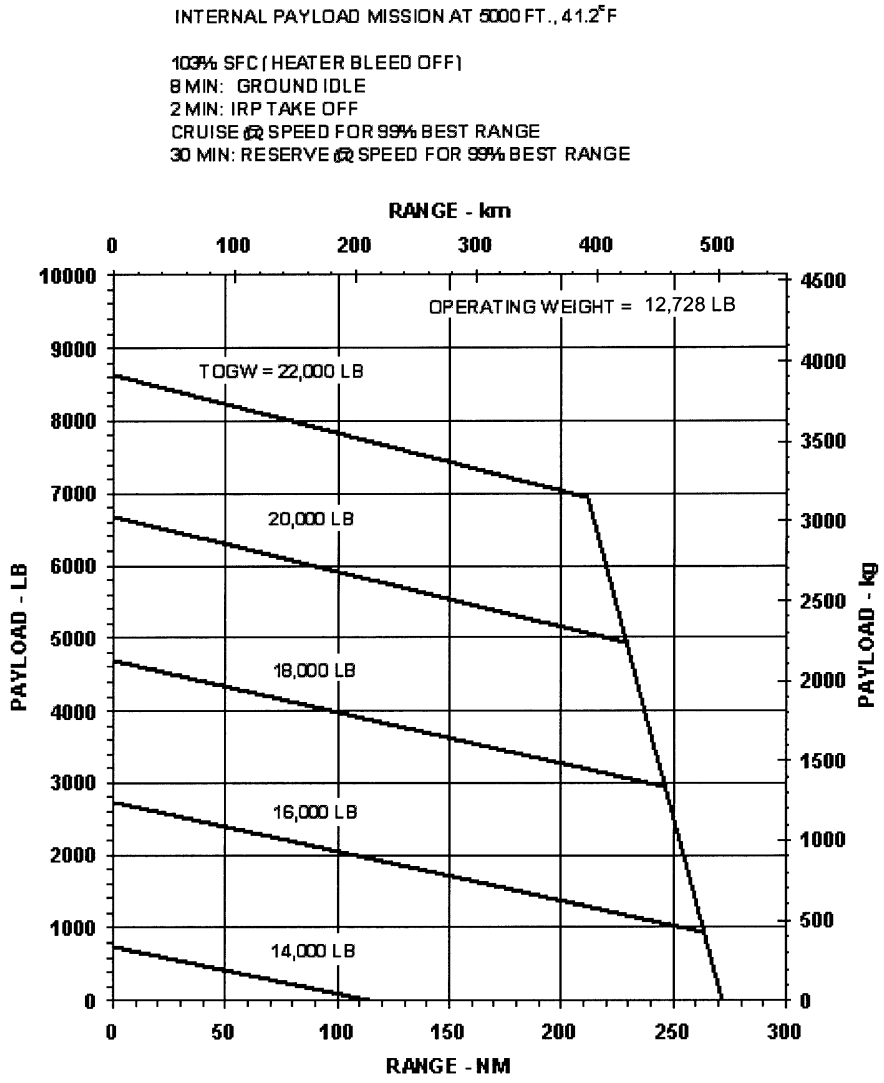

FIGURE 24. INTERNAL PAYLOAD/RADIUS CAPABILITY/5000 FT., STANDARD DAY

INTERNAL PAYLOAD MISSION AT 4000 FT., 95°F

103% SFC
8 MIN: GROUND IDLE
2 MIN: IRP TAKE OFF
CRUISE @ SPEED FOR 99% BEST RANGE
30 MIN: RESERVE @ SPEED FOR 99% BEST RANGE

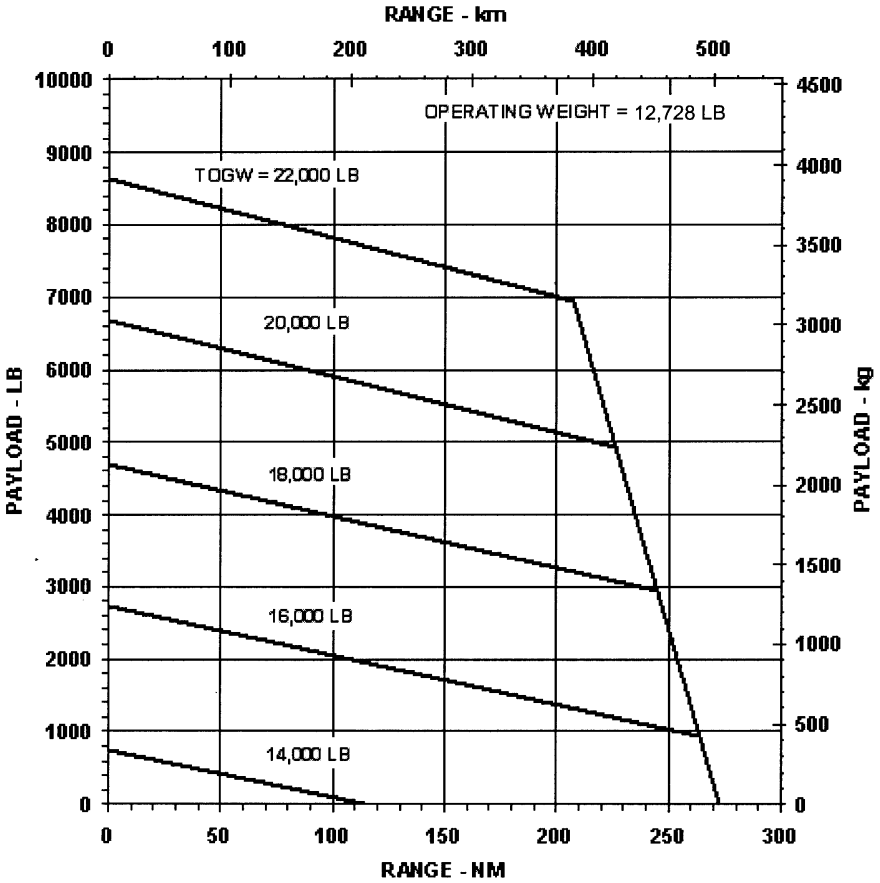

FIGURE 25. INTERNAL PAYLOAD/RADIUS CAPABILITY/4000 FT., 95°F

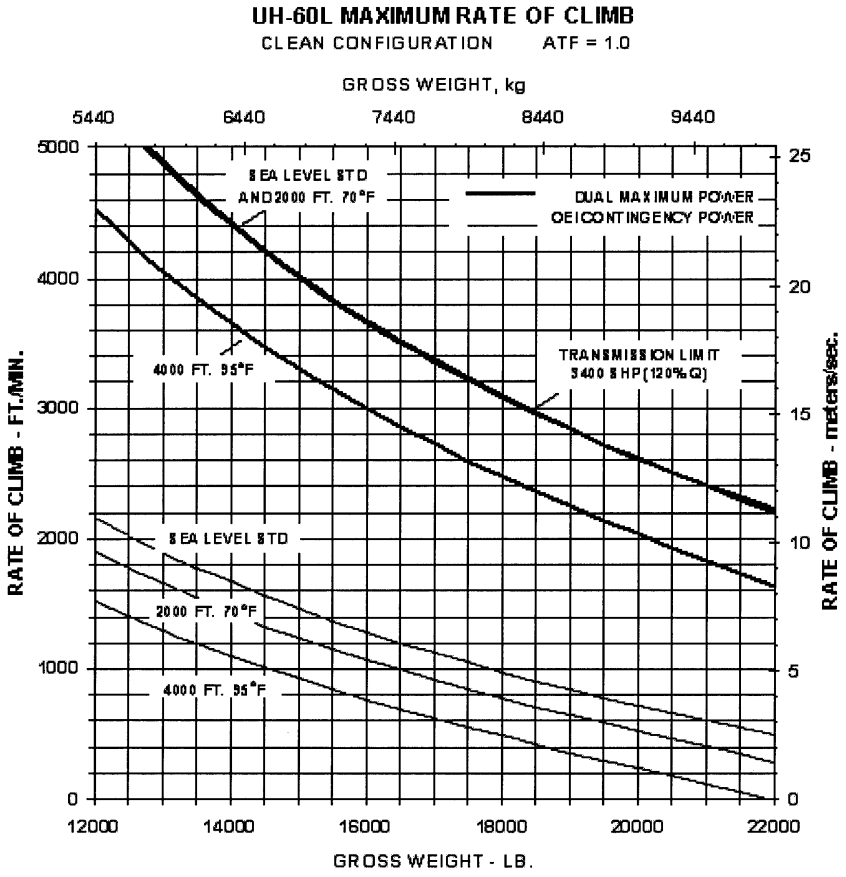

FIGURE 26. MAXIMUM RATE OF CLIMB

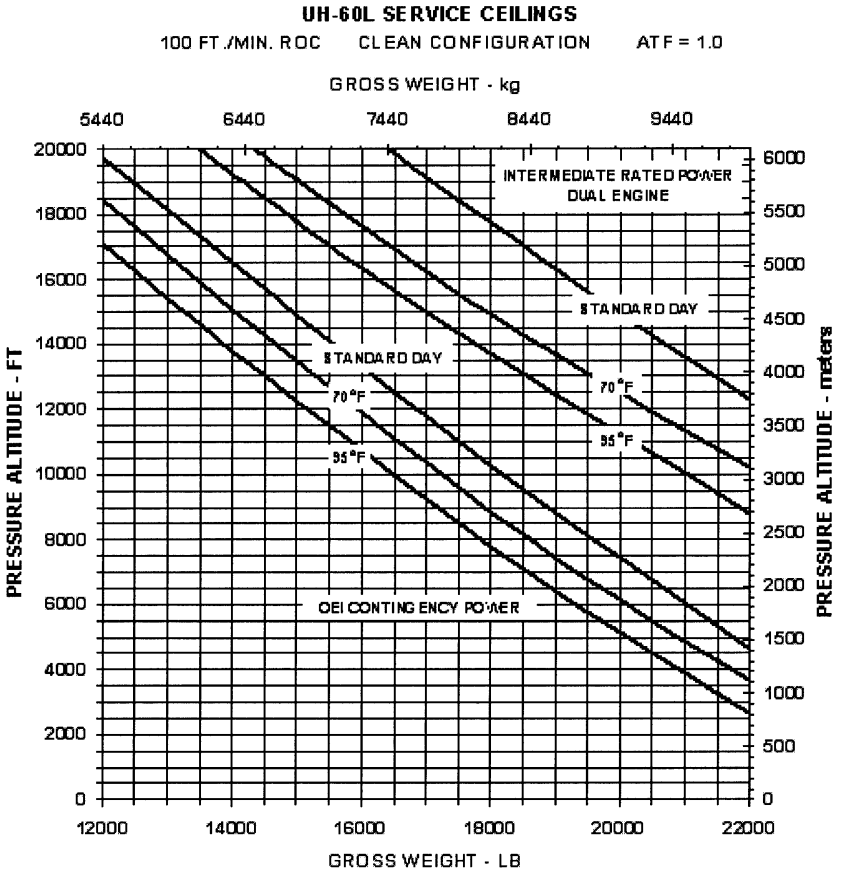

FIGURE 27. SERVICE CEILINGS

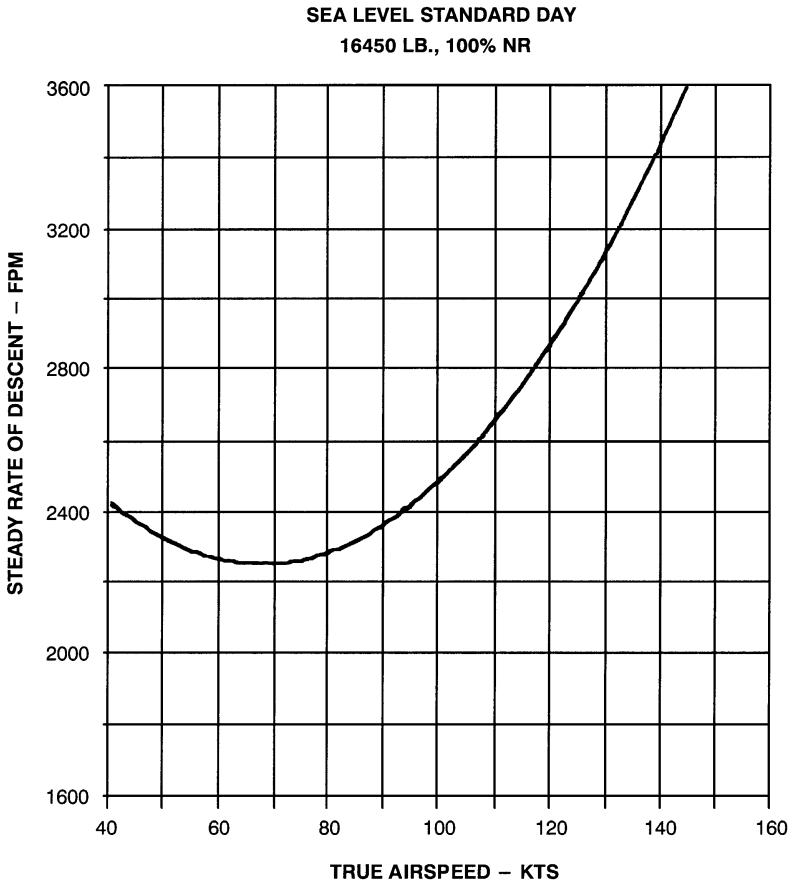

FIGURE 28. AUTOROTATIONAL DESCENT PERFORMANCE

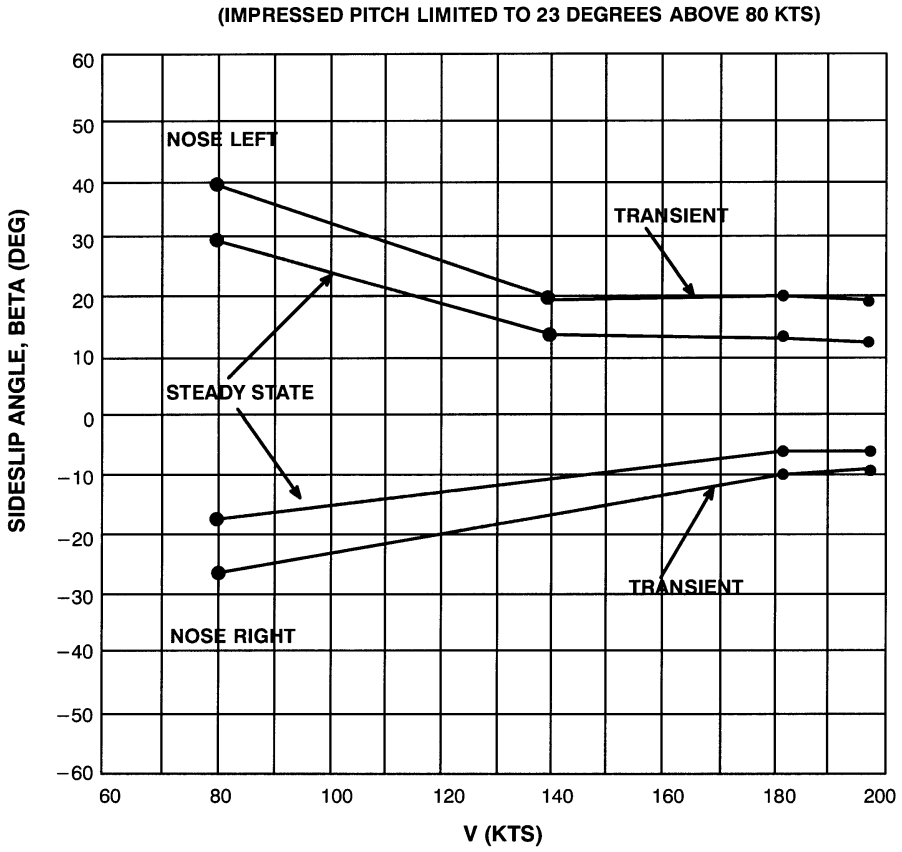

FIGURE 28A. SLIDESLIP ENVELOPE

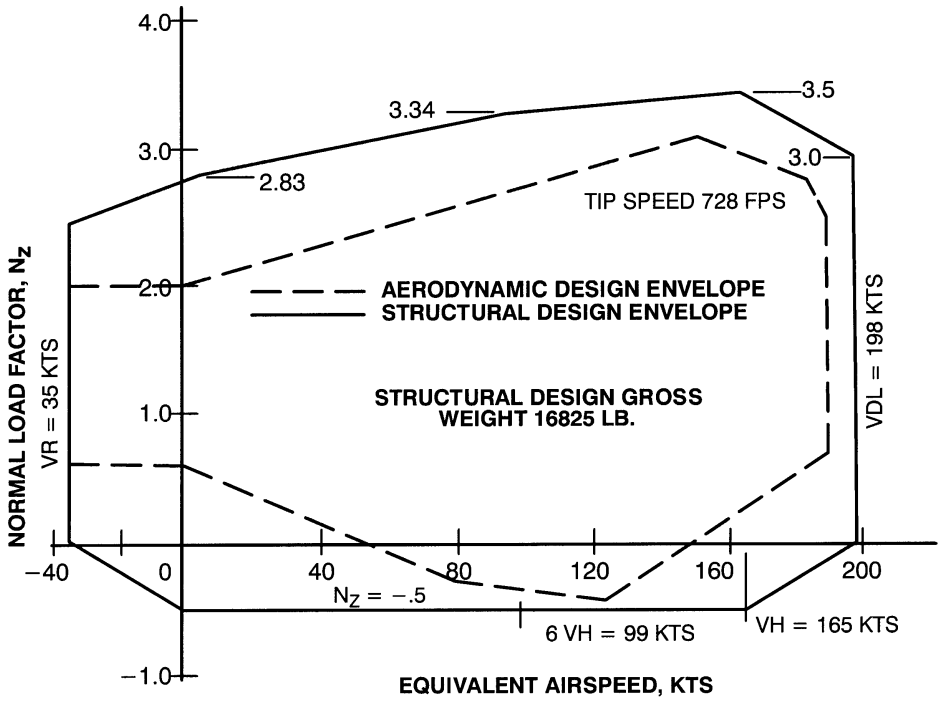

FIGURE 29A. V−NZ DIAGRAM, SEA LEVEL, STANDARD DAY

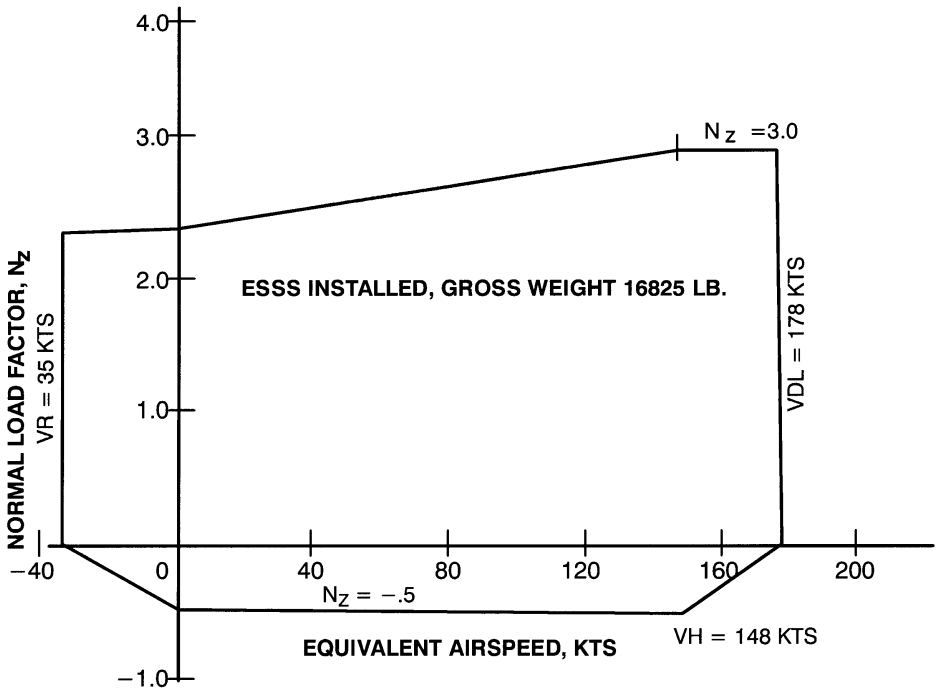

FIGURE 29B. V−NZ, SEA LEVEL, STANDARD DAY

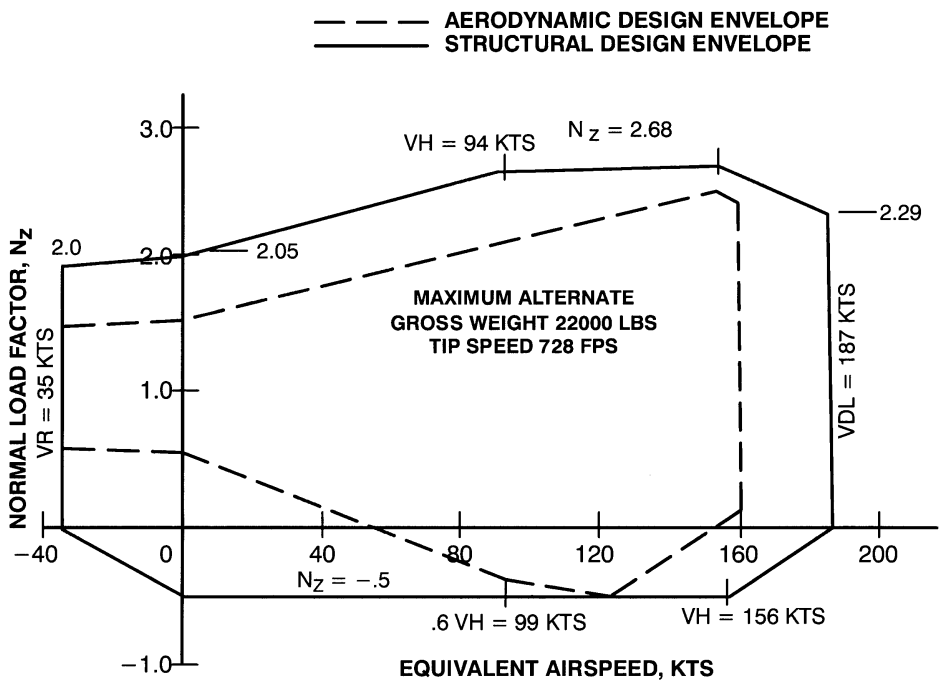

FIGURE 29C. V−NZ, SEA LEVEL, STANDARD DAY

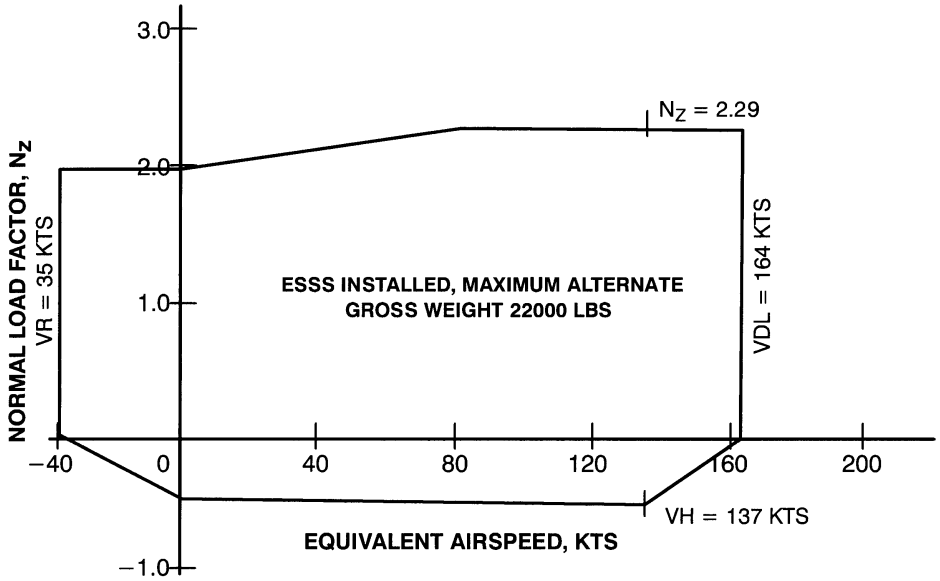

FIGURE 29D. V−NZ, SEA LEVEL, STANDARD DAY

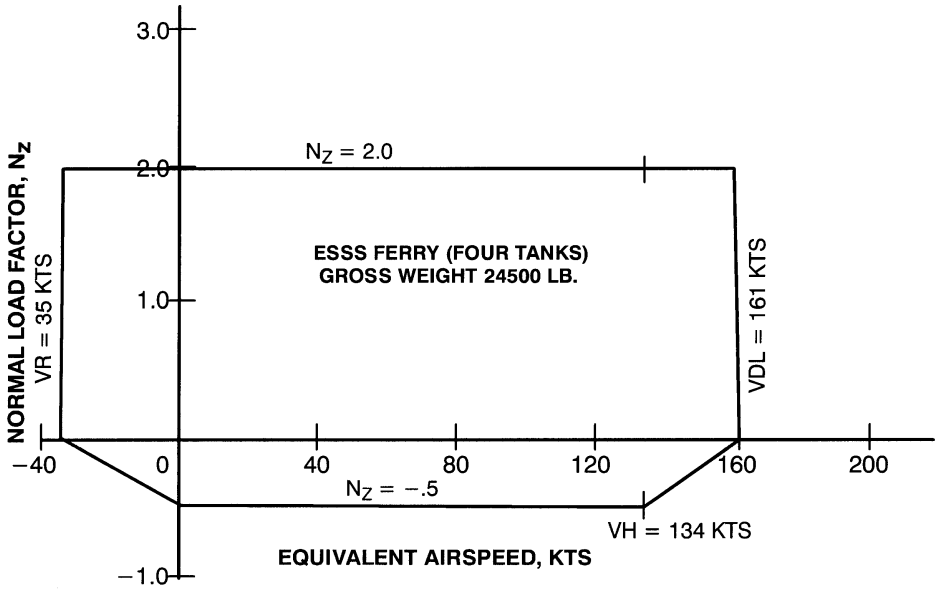

FIGURE 29E. V−NZ, SEA LEVEL, STANDARD DAY

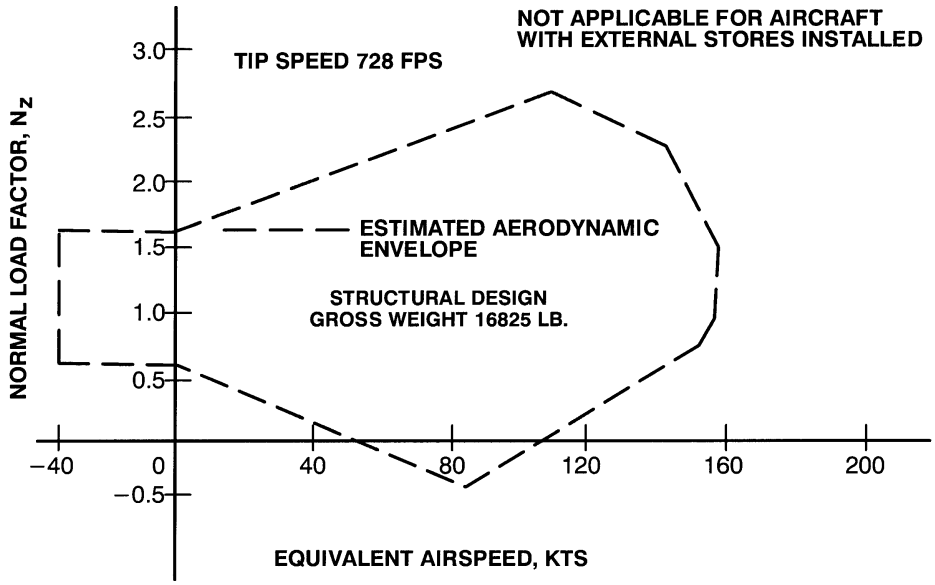

FIGURE 30A. V−NZ, DIAGRAM, 4000 FT., 95°F DAY

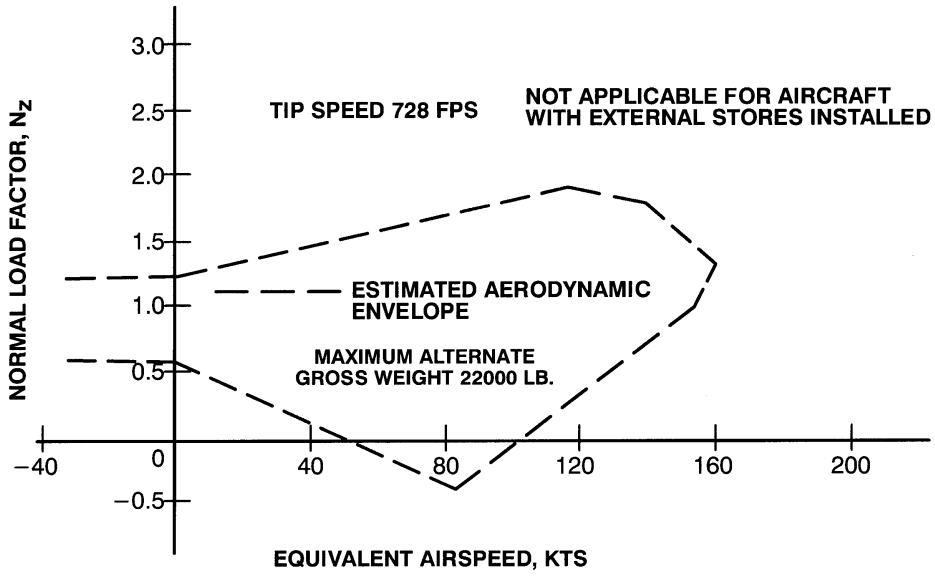

FIGURE 30B. V−NZ, DIAGRAM, 4000 FT., 95°F DAY

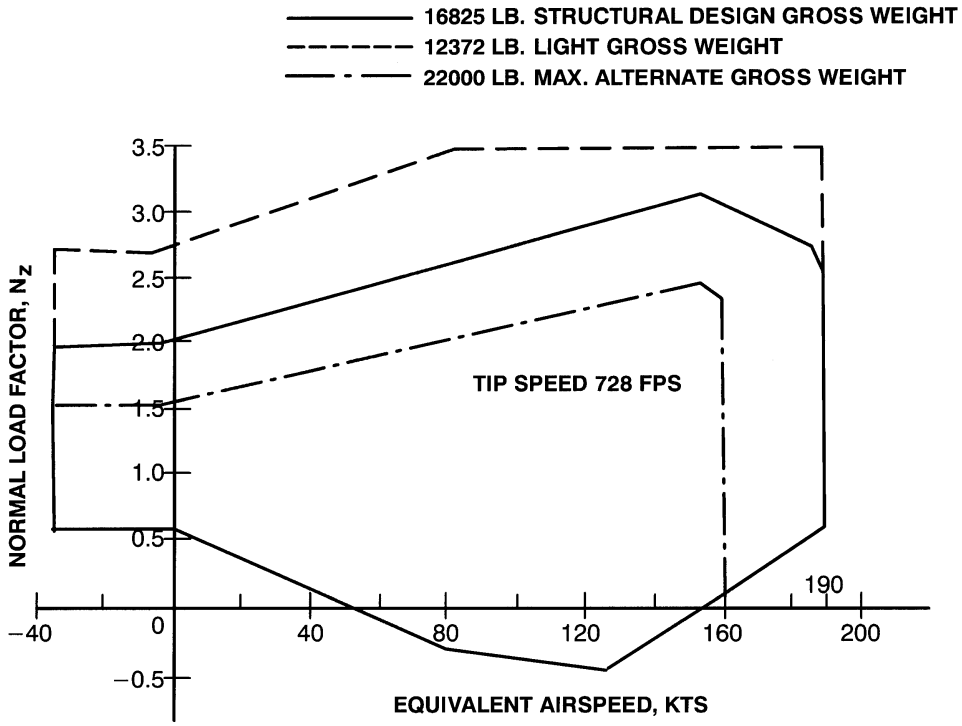

THE ABOVE PERFORMANCE CHART IS NOT APPLICABLE WHEN EXTERNAL STORES ARE INSTALLED

FIGURE 31. MAXIMUM AERODYNAMIC LIFT CAPABILITY, SEA LEVEL, STANDARD DAY

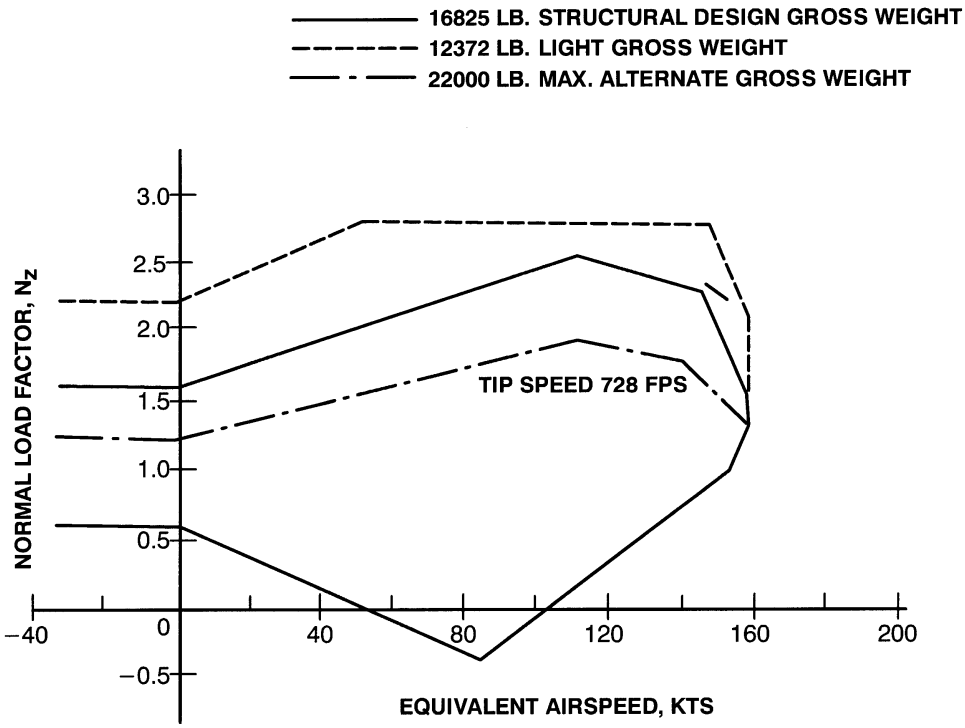

THE ABOVE PERFORMANCE CHART IS NOT APPLICABLE WHEN EXTERNAL STORES ARE INSTALLED

FIGURE 32. MAXIMUM AERODYNAMIC LIFT CAPABILITY, 4000 FT., 95°F DAY

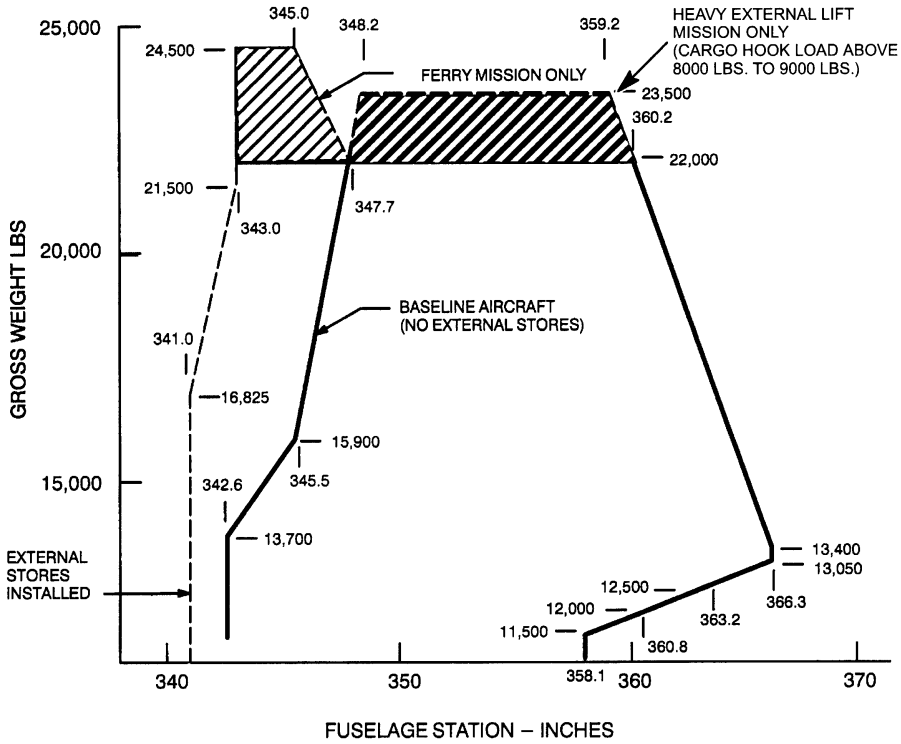

FIGURE 33. LONGITUDINAL CENTER OF GRAVITY LIMITS

Notes: (1) Handling qualities and performance are degraded at extremes of lateral CG.
(2) Aircraft component lives could be impacted at lateral C.G. offsets greater than ±2 inches.

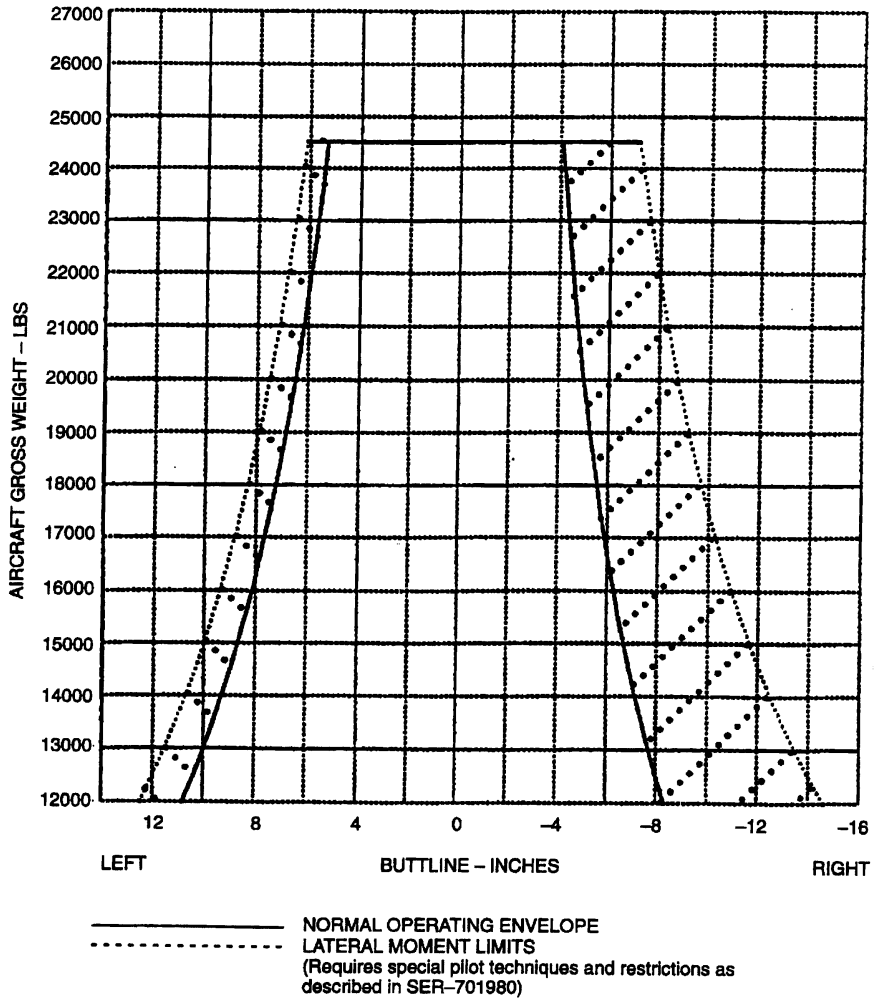

FIGURE 34. LATERAL CENTER OF GRAVITY LIMITS

3.2.1.1.3 Vibration and Dynamics. For all gross weights and center of gravity loadings up to primary mission gross weight with sea level standard conditions and 100% rotor speed the following apply.

3.2.1.1.3.1 Vibration. The aircraft shall be designed so that the vibration levels do not exceed the limits specified below. The structure shall be designed to natural frequencies and mode shapes which minimize structural response.

3.2.1.1.3.1.1 Electrical/Avionics/AFCS Equipment. Electrical, avionics and AFCS equipment, shall meet the vibration requirements specified in 3.7.10.19.1.

3.2.1.1.3.1.2 Engine, Transmission, Shaft and Rotor Installations. The UH−60L engine vibration limits shall not exceed those specified in the engine specification, E1290 with the following modifications to paragraph 3.2.1.4.10: (1) the transient extended limit on vertical, lateral and radial low frequency vibration shall be 14.0 ips, (2) the acceleration range described in Note 2.A.3 shall be between −0.6g and 1.30g, (3) the 6.0 ips limit on 25 Hz to 50 Hz vibration levels may be exceeded for up to 2 hours in 5000 flight hours of engine operation, (4) the extended vibration limits shall also apply to low speed and approach conditions in addition to the flight maneuvers defined in Note 2.B. Engine drive shaft installation vibration levels shall not exceed 0.5 ips as measured at the input module.

There shall be no significant resonances of the engine, transmission, drive shafting and rotor system throughout the full operating range of the aircraft. Critical shaft speeds for both whirling and torsional motions as well as whirling resonances involving aircraft rigid body modes shall be avoided. In the case of long span shafting rigid elastic and/or damped supports shall be provided to prevent resonant conditions. Engine resonances induced by intake airflow distortion, by frequency coupling between engine and fuselage, by gear clash excitation, and by other sources shall be avoided. The engine shall be hard mounted to the airframe; vibration isolation or absorption are not required. Overall mount system redundancy shall be provided to prevent complete separation of the engine from the aircraft in case of ballistic damage to the primary mounting system. This redundancy shall provide that engine displacement shall not be sufficient to render it inoperative or create a safety hazard.

3.2.1.1.3.1.3 Instruments. Vibrations occurring in the normal flight envelope shall not adversely affect the readability, accuracy or functioning of the instruments. The instruments, their connectors, and the supporting panel shall be free of fatigue failures for at least 5000 hours. Contractor furnished MIL–SPEC instruments shall meet the vibration requirements of their respective specifications.

3.2.1.1.3.1.4 Controls, Pilot, Crew, and Passenger. Vibration levels at all controls in any direction shall not exceed an acceleration of 0.10g for frequencies up to 5 Hz, a velocity of 1.4 in/sec for frequencies between 5 and 32 Hz, and a double amplitude of .008 in. for frequencies above 32 Hz. This requirement shall apply to all steady speeds within the helicopter design envelope and in slow and rapid transitions from one speed to another and during transitions from one steady acceleration to another.

The following limits shall apply to vibration levels at the pilot and copilot seat positions (on the floor) and at the pilot and copilot heel rest positions (on the floor). At 4/Rev, the vibratory acceleration shall not exceed 0.2g for steady forward speeds up to 30 knots, 0.15g above 30 knots to 145 knots, and 0.2g above 145 knots to V_H. For frequencies other than 1/Rev or 4/Rev, the vibratory velocity shall not exceed 0.6 in/sec for steady forward speeds between hover and 145 knots. For frequencies up to 20 Hz other than 1/Rev or 4/Rev, the vibratory acceleration shall not exceed 0.2g above 145 knots to V_H. For frequencies greater than 20 Hz, the vibratory velocity shall not exceed 0.7 in/sec for steady forward speeds above 145 knots to V_H.

1/Rev vertical vibration amplitude and phase values shall be as measured at the right and left door posts. One half the vector sum of these shall not exceed 0.25 ips at level flight airspeeds up to 145 knots or 0.30 ips above 145 knots to V_H. One half the vector difference of these values shall not exceed 0.20 ips at level flight airspeeds up to 145 knots or 0.25 ips above 145 knots to V_H.

Vibration levels at the passenger seat positions (near the floor) at all steady speeds between 0 knots and 145 knots shall not exceed a vibratory velocity of 0.6 in./sec for frequencies less than or greater than 4/Rev. At 4/Rev, the vibration of longitudinal, lateral, and vertical components shall not exceed 0.5g, for forward speeds up to 40 knots. At all speeds above 40 knots to V_H, the vibratory acceleration shall not exceed 0.4g for 4/Rev. Above 145 knots to V_H, the vibratory acceleration shall not exceed 0.2g for frequencies up to 20 Hz (other than, 1/Rev or 4/Rev), and a vibratory velocity of 0.7 in./sec for frequencies greater than 20 Hz.

Vibration levels at the personnel stations shall not exceed a vibration velocity of 2.0 in/sec for frequencies up to 50 Hz, and a double amplitude of 0.003 in. for all frequencies above 50 Hz during slow and rapid linear acceleration or deceleration from any speed to any other speed within the design flight envelope.

3.2.1.1.3.2 Dynamics

3.2.1.1.3.2.1 Mechanical Instability. The aircraft shall be free of critical mechanical instability at all operating conditions (tiedown, landing, takeoff, taxiing, and flight) when equipped with or without each type of external store to be used on the aircraft under the entire range of gross weights and inertia conditions, with brakes applied and not applied, and throughout the extreme temperature range specified in paragraph 3.2.5.1. Parameters considered shall include all possible takeoff and landing conditions including those from any heading on a slope up to and including 12 degrees, except for a nose down slope landing where the limit shall be 6 degrees. The aircraft shall be free of mechanical instability (ground resonance) under conditions of 0% to 95% airborne, with one blade damper inoperative, combined with the most critical condition of oleo strut or tire pressure (including flat tire or flat strut if applicable).

3.2.1.1.3.2.2 Flutter. The aircraft external non–rotating components and surfaces such as wings, fins, stabilizers and pylons with and without external stores shall meet the following flutter criteria. The aircraft including rotor system, shall be free of flutter and divergence within the flight envelope and at speeds up to 1.15 times the design limit speed. With the aircraft at V_{DL} the rotor system shall be free of flutter, divergence and any other aeroelastic instability at rotor speeds up to 1.15 times the design limit rotor speed with and without power. The most adverse mass imbalance of the blade allowable within production tolerances shall be accounted for in substantiating freedom from flutter and divergence.

3.2.1.1.4 Flight Controls

3.2.1.1.4.1 Design Considerations. Criteria and characteristics for the flight control subsystem, including mechanical and hydraulic features, and automatic flight control system (AFCS) are specified in 3.7.6 herein.

3.2.1.1.4.2 Flying Qualities. The aircraft shall incorporate the flying qualities characteristics as defined in Appendix I.

3.2.1.1.5 Propulsion Subsystem Characteristics. The propulsion subsystem shall consist of engines, air induction subsystem, exhaust subsystem including IR suppressor, fuel subsystem, starting subsystem, controls, transmission subsystem, and the auxiliary power unit. It shall also include integrated fire protection with special attention to preventing fire in the propulsion subsystem from spreading into the remainder of the aircraft. For criteria and characteristics, refer to 3.7.5.

3.2.1.1.6 Built In Test Equipment (BITE). The Built In Test Equipment (BITE) for the aircraft system is reflected in SER–70173.

3.2.1.2 Deployment. The following characteristics shall be provided to meet deployability requirements.

3.2.1.2.1 Loading Criteria. Physical dimensions shall allow two (2) aircraft, after preparation for air transport, to be loaded aboard a C-141B air transport. Preparation time for loading each aircraft aboard the C-141B shall not exceed 10.8 manhours within a 1.9 hour period. Provisions which allow for reassembly at destination (ready for flight operations after C-141B air transport) shall not exceed 12 manhours within a 2 hour period.

The actual loading or unloading time for one aircraft for C-141B air transport shall not exceed 30 minutes.

Physical dimensions shall allow the aircraft with only rotor blades folded to be loaded into the C-5A or the C-17 air transport. Aircraft reassembly shall not exceed one hour.

Maximum helicopter air transport height for C-141B air transport shall not exceed 107.75 inches.

3.2.1.2.2 Landing Platform Helicopter (LPH) Carriers. The aircraft shall be capable of being transported and stowed in below-deck hangars of LPH type carriers. Preparation for sea travel shall consist of folding and stowing the blades, installing tiedown devices, installing normal protective devices such as engine plugs and pitot tube covers and applying normal protective measures. Higher density loading may be accomplished by removal of the stabilator and folding the pylon.

3.2.2 Physical Characteristics

3.2.2.1 Weights

3.2.2.1.1 Weight and Balance Classification. This aircraft requires loading control since its weight or center of gravity limits can sometimes be exceeded by loading arrangements normally employed in tactical operations.

3.2.2.1.2 Weight Empty. The weight empty limit for the aircraft complete will all systems as configured in accordance with this specification is shown in 3.2.2.1.3 herein. Authorized changes to this value of weight empty shall be as tabulated in Appendix III, Configuration Audit Table 3 herein.

GROUP WEIGHT STATEMENT
USEFUL LOAD AND GROSS WEIGHT

1	LOAD CONDITION					TROOP	AEROMED	AERIAL	EXTENDED
2						ASSAULT	EVAC	RECOVERY	RANGE
3	CREW (No. 3,3,3,3)					725.0	725.0	725.0	725.0
4	PASSENGERS (No. 11,7,0,0)					2640.0	1790.0		
5	FUEL		Location	Type	Gals.				
6	UNUSABLE		FUSELAGE	JP–4	4.3	28.1	28.1	28.1	28.1
7	INTERNAL		FUSELAGE	JP–4	359.7	2338.0	2338.0	2338.0	2338.0
8	AUXILIARY								
9	AUXILIARY – UNUSABLE								
10									
11	EXTERNAL AUXILIARY		ESSS WINGS	JP–4	460.0				2990.0
12	AUXILIARY–UNUSABLE		ESSS WINGS	JP–4	3.1				20.0
13									
14	OIL								
15	TRAPPED /UNUSABLE (1.7 GALLONS)					14.3	14.3	14.3	14.3
16	ENGINE (2.1 GALLONS)					17.6	17.6	17.6	17.6
17									
18	FUEL TANKS (Location ESSS) AUXILIARY (2)								300.0
19	WATER INJECTION FLUID (Gals.)								
20									
21	BAGGAGE								
22	CARGO –SLUNG LOAD							8572.5	
23									
24	GUN INSTALLATIONS								
25	GUNS	Location	Fix or Flex	Quantity	Caliber				
26	M60–D	CABIN	FLEX	2	7.62MM	88.4	88.4		
27									
28	AMMO.			1100 RDS.	7.62MM	72.0	72.0		
29									
30									
31	SUPP'TS								
32	WEAPONS INSTALL. (Incl. Submarine Detection Expendables)								
33									
34									
35									
36									
37									
38									
39									
40									
41									
42									
43									
44									
45									
46	EQUIPMENT								
47									
48	SURVIVAL KITS & LIFE RAFTS								
49	AEROMEDICAL EVACUATION KIT						840.7		
50	OXYGEN								
51	CARGO HOOK							22.0	
52	EXTERNAL STORES SUPPORT SYSTEM KIT								822.6
53	EXTERNAL STORES SUPPORT SYSTEM KIT TRAPPED FUEL								8.9
54									
55	TOTAL USEFUL LOAD					5923.4	5914.1	11719.3	7264.5
56	WEIGHT EMPTY					11782.5	11782.5	11782.5	11782.5
57	GROSS WEIGHT					17705.9	17696.6	23500.0	19047.0

* If Removable and Specified as Useful Load

** List Stores, Missiles, Sonobuoys, Etc. Followed by Racks, Launchers, Chutes, etc. Not Part of Weight Empty.
List Identification, Location, and Quantity for All Items Shown Including Installation.

3.2.2.1.3 Operating Weight. Operating weight shall be weight empty plus armament installation, unusable fuel and oil, engine oil, and crew. Operating weight is presented for the following loading conditions.

	Mission			
Item	Troop Assault	Aeromedical Evacuation	Aerial Recovery	Extended Range
Weight Empty*	11782.5	11782.5	11782.5	11782.5
Pilot & Copilot	470.0	470.0	470.0	470.0
Crewchief	255.0	255.0	255.0	255.0
Fuel–Unusable (4.3 Gal. JP–4)	28.1	28.1	28.1	28.1
Fuel–Unusable–Ext. Aux. (3.1 Gal. JP–4)				20.0
Fuel– Trapped – ESS				8.9
Oil–Engine – Trapped/Unusable (1.7 Gal.)	14.3	14.3	14.3	14.3
Oil–Engine (2.1 Gal.)	17.6	17.6	17.6	17.6
Armament (2) M–60D	88.4	88.4		
M–60D Ammunition	72.0	72.0		
Aeromedical Evacuation (6–Patient Litter)		840.7		
Cargo Hook Installation			22.0	
Extended Range Fuel External Aux. Tanks (Two 230–Gal.) ESSS Kit				300.0
Operating Weight	12727.9	13568.6	12589.5	13719.0

* Authorized changes to this value of weight empty shall be as tabulated in Appendix III, Configuration Audit Table 3 herein.

3.2.2.1.4 Useful Load. Useful load shall consist of specified combinations of flight crew, troops, cargo, alternate mission equipments, usable and unusable fuel and oil and as listed herein on the group weight statement of 3.2.2.1 herein.

3.2.2.1.4.1 Crew. The crew shall consist of a pilot, copilot, and crewchief/gunner.

3.2.2.1.5 Primary Mission Gross Weight. The primary mission weight is the sum of the payload and 2.27 hours of mission fuel load of 3.2.1.1.1.1c for the troop assault primary mission and operating weight empty of 3.2.2.1.3. The primary mission gross weight shall be 17,708.4 pounds for the first and subsequent aircraft. Authorized changes to this value of primary mission gross weight shall be as tabulated in Appendix III, Configuration Audit Table 3 herein.

3.2.2.1.6 Maximum Alternate Gross Weight. The maximum alternate gross weight shall be 22,000 pounds, except for the external lift mission (above 8,000 pounds to 9,000 pounds) which shall be 23,500 pounds and for self–deployment which shall be 24,500 pounds.

3.2.2.1.7 Unit Weights. The following unit weights shall be used.

CREW WEIGHT (each) (based on 75th percentile man)	
Military pilot (including normal flight clothing, gloves, helmet, first aid packet, exposure suit, pistol, holster, ammunition, knife, and armor vests and chest protector)	235. lb.
CREWCHIEF/GUNNER	255. lb.
COMBAT TROOP (each)	240. lb.
LITTER PATIENTS (includes 25 lbs for litter, splints and blankets)	265. lb.
MEDICAL ATTENDANT	200. lb.
FUEL (per gallon)	
MIL–T–5624 (Grade JP–4)	6.5 lb.
MIL–T–5624 (Grade JP–5)	6.8 lb.
Oil (per gallon)	
MIL–L–7808	7.7 lb.
MIL–L–23699	8.4 lb.
DOD–L–85734	8.4 lb.
Hydraulic Fluid (per gallon)	
MIL–H–5606	7.0 lb.
MIL–H–83282	7.1 lb.
M60D Machine Gun (each)	24.7 lb.
7.62mm Ammo (each)	0.065 lb.

3.2.2.1.8 Center of Gravity. Center of gravity limits for the estimated weights shown in the weight statement, shall be as specified herein. (The main rotor centroid is at fuselage station 341.2, fuselage waterline 315.0). The aircraft shall be capable of normal flight operations with a crew of two pilots (185 pounds each) and full internal fuel.

3.2.2.1.8.1 Longitudinal Center of Gravity Limits. Longitudinal center of gravity limits are shown in Figure 33.

3.2.2.1.8.2 Lateral Center of Gravity Limits. Lateral center of gravity limits are shown in Figure 34.

3.2.2.2 Dimensions and General Data. The principal dimensions and general data are calculated to be as follows: (The following information is not to be used for inspection purposes:)

Main Rotor	
Number of blades	4
Diameter	53 ft 8 in
Main rotor mast tilt (longitudinal)	3 deg
Tail Rotor	
Number of blades	4
Diameter	11 ft
Cant angle	20 deg
Horizontal Stabilator	
Span	172.6 in
Vertical Tail	
Span	8 ft 2 in
Width	
Main rotor blades turning	53 ft 8 in
Main rotor blades at rest	53 ft 8 in
Length	
Maximum – main rotor blades extended and at rest, one trailing	64 ft 10 in
Maximum – main rotor blades turning	64 ft 10 in
Fuselage (nose to vertical tail)	50 ft 0.75 in
Main rotor to tail rotor clearance	2.8 in
Height	
Over tail rotor blades at rest	16 ft 10 in
Main rotor clearance (ground to tip, rotor static against stops)	7 ft 8.5 in
Tail rotor clearance (ground to tip, rotor turning)	6 ft 6 in
Tires and Wheels	
Wheel Size:	
Main wheels	26 x 9.5–11
Auxiliary (tail) wheel	6.00 – 6

3.2.2.2 (Cont'd)

Tires and Wheels (Cont'd)		
Main wheels		26 x 10.0–11
Auxiliary (tail) wheel		15 x 6.00–6
Tread of main wheels		8 ft 10.6 in
Wheel base		28 ft 11.75 in
Main Rotor RPM	Power On	Power Off
Design minimum	232.3	232.3
Design maximum	257.7	257.7
Design limit	322.1	322.1
Tail Rotor RPM	Power On	Power Off
Design minimum	1070	1070
Design maximum	1190	1190
Design limit	1489	1489

3.2.2.3 Storage. The UH–60L and its associated equipment shall be capable of safe storage and transportation in accordance with AR 70–38. The aircraft shall be capable of operation following exposure to wind speeds up to 70 knots from any direction when the aircraft is secured and tied down in accordance with the standard operating procedures.

3.2.2.4 Structural Design Criteria

3.2.2.4.1 Strength Requirements. Table 3.2.2a. The structure of the aircraft shall be capable of operating within the structural design envelopes of Figures 29 and 30 for the useful life and flight profile of 3.2.11. The primary structure including dynamic components shall be damage tolerant to the extent specified in 3.2.2.4.3.1. Other specific strength requirements are as follows:

3.2.2.4.1.1 Basic Structural Design Weight. The basic structural design gross weight for structural design purposes shall be 16,825 pounds.

3.2.2.4.1.2 Floor Loading. Design limit floor pressures shall be 75 Nz PSF for crew floors and 300 Nz PSF for cargo areas. The load factors Nz shall be 3.50 plus increments due to angular accelerations from maneuvers, or the load factor resulting from hard landings up to 9 feet per second, whichever is greater. In addition, the following criteria shall apply.

a. The cargo floor shall have a local loading capability for a 50 psi limit load applied to a single 0.5 square foot area (8 x 9 to 3 x 24) within any 6 square foot area.

b. A cargo floor panel, 18 inches square and supported at two edges, shall withstand the impact from a sturdy pine box, uniformly loaded so that the box and its contents weigh 200 lbs, dropped from a height of 15 inches above the panel (distance between panel and lowest corner of box) so that one corner of the box strikes the center of the panel. The local deformation in the floor, caused by this impact shall not exceed 0.3 inch. The line from the box center of gravity through the box corner and the contact point with a horizontal floor shall be vertical. The corner radius of the box shall not exceed 1/2 inch.

c. The cargo floor shall withstand, without undue surface wear or evidence of fatigue cracking, the effects of 700 complete trips in a fixed path of a 500 pound load applied by a steel wheel 8 inches in diameter and 2–1/2 inches wide.

d. The cargo floor shall withstand 100 repetitive drops of a 24 pound 81 mm mortar base plate oriented horizontally with tangs down from a height of 20 inches, with no damage requiring repair.

3.2.2.4.1.3 Engine Mounts and Inlets. The engine mounts shall withstand the loads resulting from the engine torque, thrust, and gyroscopic couple in combination with the flight and inertia loads due to maneuver, gust, or ground conditions. In addition, engine mounts shall withstand transient torque and crash load conditions. For side loads, a minimum limit side load factor of 1.33 shall be applied. The engine mount and support structure shall withstand the inertia torque resulting from the sudden simultaneous stoppage of the turbine blades or rotors combined with the flight loads for 3.0g flight. The inlet and all affected structure shall withstand the loads which occur within the design envelope including the effects of engine failures and malfunctions, engine stall, and surge loads.

3.2.2.4.1.4 Landing and Ground Loads. At the basic structural design gross weight, the design limit sinking speed shall be 9 feet–per–second at level ground contact and 6 feet–per–second for contact on any 12 degree slope. The forward velocities at level ground contact shall be all values from 0 knots to 60 knots, and for 12 degree slopes shall be all values from 0 knots to 35 knots parallel to the landing surface. Ground operations, handling and ski load shall apply.

3.2.2.4.1.4.1 Auxiliary Gear Obstruction Loads. Not used.

3.2.2.4.1.5 Cargo Tiedown Rings/Studs. Cargo tiedown ring and stud attachments shall be capable of withstanding a 5000 lb. limit resultant load in all practical directions. (See 3.7.14.2.1.)

3.2.2.4.1.6 Pushover Maneuver. The aircraft structure shall withstand symmetrical pushover maneuver within the structural design envelope shown in Figure 29.

3.2.2.4.1.7 Gusts. The gust load criteria shall include the effects of gusts in any direction.

3.2.2.4.1.8 Yield Factor of Safety. The yield factor of safety shall be 1.0.

3.2.2.4.1.9 Cargo Doors. Cargo doors shall be capable of being opened and closed at all speeds up to 120 Knots Equivalent Airspeed (KEAS). The aircraft may be flown with doors open to V_H.

3.2.2.4.1.10 Tail Rotor Loss. The aircraft structure shall withstand loss of the tail rotor at design limit speed or any lesser critical speed. A two second delay for entry into auto–rotation shall be used. Following this failure the ultimate factor of safety need not be greater than 1.0 for this condition.

3.2.2.4.1.11 Store Hardpoints. The minimum ultimate crash load factors for side mounted external stores shall be any combination of the following:

Longitudinal	+6	(forward)
Vertical	+6/–3	(down/up)
Lateral	6/3	(inboard/outboard)

Hardpoints for an external stores pylon on each side of the aircraft shall be provided. (The external stores pylons are not a part of this specification.) The physical characteristics of the suspended store shall be:.

Weight: 750 lbs. Moment of Inertia: 500,000 lb–in^2

(NOTE: Design loads are opposite to the load factors.)

Internally mounted stores installation shall meet the requirements of 3.2.2.4.4.1.

3.2.2.4.1.11.1 External Stores Support System Fixed Provisions. In addition to the Store Hardpoints specified in 3.2.2.4.1.11, the following fixed provisions (see 6.3.8.1) for an External Stores Support System (ESSS) shall be incorporated:

a. Horizontal Stores Support (HSS)/fuselage attachment assembly – Upper.

b. Support strut/fuselage attachment assembly – Lower.

c. Fuel/air line fuselage/ESSS self–sealing breakaway interface installation (right and left side).

d. Electrical fuselage/ESSS interface installation.

e. ESSS electrical provisions not easily removed, including airframe mounted fixed/removable interface installations.

f. ESSS fuel/air line provisions not easily removed, including airframe mounted fixed/removable interface installations.

g. Horizontal Stores Support/fuselage attachment assembly work platform/fairing.

The above fixed provisions shall meet the requirements of SES–700006, CIDS, as defined on page 20, para. 2.2.2 herein and shall be incorporated in the UH–60L aircraft to allow for installation of the removable portion of the ESSS as defined by SES–700006 and as may be subsequently revised by contractually incorporated SCN's applicable to the removable system.

3.2.2.4.1.12 Repairability. The structural design shall be such that repair of structural damage from 12.7 mm projectiles can be performed without requiring master jigging or special tools not normally found at Aviation Intermediate Maintenance (AVIM).

3.2.2.4.2 Fatigue. Safe life design shall be employed as the primary means of satisfying the useful life requirements of 3.2.11. In addition, damage tolerance shall be as specified below for primary structure vital to the integrity of the vehicle or the safety of personnel. The design fatigue life shall be substantiated to the usage spectrum of 3.2.11. A fatigue failure shall be defined as any crack caused by repeated loads which is detectable by state of the art nondestructive inspection techniques.

3.2.2.4.2.1 "Fail–Safe" Principles. Wherever practicable, "fail–safe" design principles shall be employed to permit use of "on–condition" replacement rather than mandatory component retirement times. These principles shall include slow crack growth, crack arrestment, alternate load paths, and the establishment of adequate inspection intervals and procedures.

3.2.2.4.3 Damage Tolerance

3.2.2.4.3.1 Damage Tolerance – Primary Airframe Structure. The primary airframe structure shall incorporate materials, stress levels, and structural configurations that will minimize the probability of loss of the aircraft due to damage of a single structural element or due to propagation of undetected flaws, cracks, or other damage. Slow crack growth, crack arrestment, and redundant load paths shall be used to achieve this capability. Airframe structural components shall accept damage from impact by a non–explosive projectile of size up through 23 mm and still be capable of supporting design limit loads without failure (yielding is allowed for this condition) for at least 30 minutes. The flight essential airframe structure, except for the vertical tail pylon area, shall accept damage from a 23 mm HEI projectile striking at 1600 FPS and still be capable of supporting normal flight loads without failure (yielding is allowed for this condition) for at least 30 minutes.

3.2.2.4.3.2 Damage Tolerance – Flight Essential Components. All flight essential components shall be damage tolerant to the primary threat defined in paragraph 3.2.10.1. The specific requirement is that these unprotected components shall accept damage from any 7.62 mm AP projectile and still be capable of supporting design limit loads without failure (yielding is allowed for this condition), and shall be capable of continued safe flight for at least 30 minutes.

Flight essential components shall also be damage tolerant for impacts by larger threat projectiles. In particular, the flight essential components listed below shall accept damage from impact by a projectile of the type and striking velocity specified and still be capable of supporting normal loads without failure (yielding is allowed for this condition) and continued safe flight for at least 30 minutes.

Flight Essential Component	Projectile	Striking Velocity
Control Rods (Primary Servo to Main Rotor Blades)	12.7 mm API	1600 FPS
Main Rotor Swash Plate Assembly	12.7 mm API	1600 FPS
Main Rotor Shaft	23 mm API or 23 mm HEI	1600 FPS
Main Rotor Hub and Elastomeric Bearing Assembly	23 mm API or 23 mm HEI	1600 FPS
Main Rotor Blades	23 mm API	1600 FPS
	23 mm HEI at 1600 FPS for at least 90 percent of lower hemisphere type impacts	
Tail Rotor Drive Shaft (tail cone)	12.7 mm API	1600 FPS
Tail Rotor Drive Shaft (Pylon)	23 mm API	2600 FPS
Tail Rotor Hub	12.7 mm API	1600 FPS
Tail Rotor Blade (Flatwise)	23 mm API	2600 FPS

3.2.2.4.4 Airframe Crashworthiness. TR 71−22 shall be used as a design guide for airframe crashworthiness. To the maximum extent practical the aircraft structure shall be an energy absorber for the 95th percentile crash velocity changes as specified in TR 71−22. During the specific crash environments, crash forces experienced by the occupants shall be within human tolerance and occupiable space shall be retained in order to provide restraint and rapid egress from the aircraft under any conceivable postcrash attitude. Specific requirements shall be as specified herein.

3.2.2.4.4.1 Load Factors. Unless otherwise specified, the supports for all mass items which would pose a hazard to personnel during a crash shall withstand the following ultimate load factors:

	Applied Separately	Applied Simultaneously		
		(a)	(b)	(c)
Longitudinal	±20	±20	±10	±10
Vertical	20/−10	10/−5	20/−10	10/−5
Lateral	±18	±9	±9	±18

The engine and transmission shall withstand 95 percent of the above load factors without penetrating the cabin.

3.2.2.4.4.2 Longitudinal Impact. The aircraft at basic structural design weight shall be capable of impacting longitudinally into a rigid wall at 20 feet−per−second without precluding safe evacuation by the crew, and at 40 feet−per−second without reducing the length of the troop compartment by more than 15 percent. In addition, impacts with up to 15 degrees nose down impact angle and 60 feet−per−second forward velocity shall be sustainable without the loss of more than 5 percent of the living space in either cockpit or troop compartment.

3.2.2.4.4.3 Vertical and Lateral Impact. The living space in the troop compartment shall not be reduced more than 15 percent in volume due to a 38 feet−per−second vertical impact or a 30 feet−per−second lateral impact.

3.2.2.4.4.4 Turnover Structure. The fuselage structure shall sustain turnover loads. The loads shall be all combinations of the following:

a. 4W perpendicular to a waterline

b. 4W longitudinally parallel to a waterline

c. 2W laterally

W is the basic structural design gross weight. For this condition the aircraft shall be resting on the ground in an attitude through which it passes after turning over and which appears most critical for the safety of the occupants. In addition, rollover and fuselage loads shall be those resulting from a 100 feet per second forward airspeed ground impact at five degree impact angle. Passenger occupiable volume for this condition shall not be reduced by more than 15 percent.

3.2.2.4.4.5 Nose Plowing. The nose section shall preclude any earth plowing and scooping tendency when the forward 25 percent of the fuselage has a uniformly applied local upward load factor of 10g and a rearward load factor of 4g.

3.2.2.4.4.6 Fuselage. The fuselage shall be such that fuselage separation due to shearing, bending, or landing gear penetration shall not adversely affect the survivability of personnel in the cockpit or troop compartment. Separation shall not occur in close proximity to flammable fluid tanks. The potential of external stores to penetrate passenger volume, flammable fluid tanks, or electrical wires shall be minimized as a design goal.

3.2.2.4.4.7 Tail Landing Gear. Landing at design limit sinking speed and the pitch attitude corresponding to an IGE hover in a 60 knot tailwind shall not damage the landing gear, fuselage, or tail boom.

3.2.2.4.4.8 Blade Strikes. The rotor mast shall not fail and the transmission shall not be displaced into occupiable space when the main rotor blades impact into a rigid object eight inches in diameter on the outer 32% of the blade at operational rotor speed.

3.2.2.4.4.9 Wire Strikes. A Wire Strike Protection System (WSPS) shall be provided. The WSPS consists of an upper cutter and a pitot cutter mounted on the overhead sliding fairing structure assembly, two (2) windshield deflectors, two (2) windshield wiper post deflectors, two (2) cockpit step deflectors (one (1) each step), two (2) deflectors to be mounted on the landing gear (one (1) each gear) and a tail wheel deflector.

3.2.3 Reliability. The aircraft shall achieve the reliability objectives stated herein. The aircraft shall be maintained in accordance with 3.2.4. The stated aircraft reliability requirements include all Government Furnished Property (GFP) with the exception of the GFP armament, kits and those equipments for which space, weight, power and complete provisions only have been provided and any Aircraft Survivability Equipment (ASE) whether Government furnished or Contractor furnished.

Data for GFP, exclusive of integration/installation effects, are provided in Table I. Damage to equipment attributable to enemy action or operation of equipment outside of prescribed limits is excluded in the stated reliability requirements. These requirements are defined to "stand alone", in order to meet the requirements for the aircraft. They are not necessarily mathematically independent. If combinations of these requirements are to be used in higher level models (operational availability, cost effectiveness, etc.) the non–independence, if any, shall be accounted for in the higher level model.

Failure is defined by MIL–STD–721 with failure limits specified in the applicable documents. An item shall be considered to have failed anytime corrective maintenance manhours must be expended on the item regardless of when the failure occurs or is discovered. Only primary (independent) failures are chargeable. Dependent failures are considered in the calculation of MTBR and MTBRRDR values as stated in 3.2.3.4. A secondary (dependent) failure need not occur immediately after an independent failure. Non–chargeable failures include:

a. Secondary (dependent) failures resulting from a primary (independent) failure;

b. Failures caused by battle damage;

c. Failures caused by maintenance error (maintenance performed that is not in accordance with contractor prepared maintenance documents or specified procedures);

d. Failures caused by pilot error (aircraft operations that are not in accordance with contractor prepared operating procedures and documents);

e. Failures caused by the operation of equipment outside of prescribed limits unless an integral protective device is provided;

f. Failures caused by mishandling which exposes the equipment to environments beyond the design requirements;

g. Failures caused by unauthorized testing, test methods or faulty test procedures (unauthorized testing, test methods, or faulty test procedures include tests, methods or procedures that are not part of a Government/Contractor–approved test plan or unauthorized operation that is not in accordance with the approved operator's manual);

h. Failures caused by contaminated fluid (fuel, hydraulic, nitrogen, or lubrication) in excess of specification requirements from an outside source;

i. Any aircraft hardware failure resulting from the act of performing an unauthorized aircraft modification;

j. Failures of government field modifications not in accordance with engineering drawings.

3.2.3 (Cont'd)

k. Failures found in a component during subsequent related maintenance following an initial chargeable maintenance action;

l. Failures of equipment not part of the basic aircraft defined in this paragraph;

m. Failures of special test instrumentation;

n. Failures of GFP armament;

o. Removals for controlled exchange or failures caused by controlled substitution.

p. Any failure which occurs and for some reason receives no corrective maintenance action shall not be chargeable. Failures will only be counted when a corrective maintenance action is warranted, in accordance with the applicable technical manual. In other words, if no corrective action is required, a failure could not have occurred by the definition employed. Cleaning of chip detectors as a result of detection system failure is considered a corrective maintenance action.

q. Failures of Government Furnished Ground Support Equipment;

r. Removals to facilitate other on–aircraft maintenance;

s. False transmission and T700 engine chip detector indications unless a mission abort occurred; however, the maintenance time to clean the detector and any mission abort are chargeable. Failures of the chip detection system itself (including failure to burn off fuzz) are chargeable.

t. Adjustments within specified failure limits made for operator preference;

u. Failures resulting from the use of malfunctioning Ground Support Equipment;

v. Acts of God; and

w. Any failures occurring prior to delivery and acceptance of the aircraft by the customer.

x. Any malfunction which is corrected by minor adjustment, alignment of common hardware or rebonding unless the malfunction caused a mission abort or replacement of hardware.

y. Replacement of common light bulbs, missing common fasteners, replacement of loose or missing rivets, stop drilling of cracks or minor sheet metal or fiberglass repairs unless the condition caused a mission abort or the replacement of other hardware.

z. Foreign Object Damage (FOD) caused by unusual or unexpected operational environments. FOD from usual or expected operational environments is chargeable.

Items a, k, r, the indicated portion of s, and items x and y are counted in determining chargeable maintenance as stated in 3.2.4.

TABLE I
RELIABILITY AND MAINTAINABILITY VALUES FOR GFP

						Aviation Unit CM			Intermediate Support CM		Depot CM	
Applicable Mission	Item Description	QTY A/C	MTBF Flight Safety Rel.	MTBF Mission Rel.	Corrective Maintenance (CM)	Repairs per Operating Hour	MTTR per Event	Manhours per Event	Repairs per Operating Hour	Manhours per Event	Repairs per Operating Hour	Manhours per Event
All	VHF-AM/FM Radio Set, AN/ARC-186(V)	1	NA	733	417	.0024	.02	.02	.0024	8.7	.0024	11.73
All	VHF-FM Radio Set, ARC-201	2	NA	6490	1393	.0007	.02	.02	.0007	8.7	.0007	4.73
All	UHF-AM Radio Set, AN/ARC-164(V)	1	NA	1500	1000	.0010	.02	.02	.0010	1.00	.0010	11.70
All	Interphone Control, C-6533/ARC	5	NA	55,000	14,286	.00007	.01	.01	.00007	34.95	.00007	52.00
	Handset, H-250/U	1	NA	–	–	–	–	–	–	–	–	–
All	Automatic Direction Finder AN/ARN-149(V)	1	NA	730	455	.0022	.03	.03	.0022	8.80	.0022	12.36
All	Gyro Magnetic Compass Set AN/ASN-43	1	NA	1610	526	.0019	.07	.07	.0019	7.00	.0019	13.38
All	Transponder Set, AN/APX-100(V)	1	NA	1000	667	.0015	.07	.07	.0015	4.00	.0015	7.75
Wartime Missions Only	Communication Security Set, TSEC/KY-28 or TSEC/KY-58	3	NA	1570	1000	.0010	.04	.04	.0010	7.02	.0010	11.25
Wartime Missions Only	Computer, Mark XII KIT-1A/TSEC Including Mounting	1	NA	3500	2500	.0004	.04	.04	.0004	31.42	.0004	47.86
All	Lightweight Doppler Navigation System (LDNS) AN/ASN-128	1	NA	350	233	.0044	.01	.01	.0044	3.75	.0044	9.55
All	Displacement Gyro CN1314A/A	2	NA	1500	1000	.0010	.01	.01	.0010	3.25	.0010	22.75
All	Digital CISP	1	NA	40,000	1250	.0008	1.42	1.42	.0008	8.7	.0008	11.73
All	T700 Engine (Inflight Shutdown) (Accidents)	2	303,000 1,250,000	379	185	.0054	.53	.86	.0034	1.62	.0061	33.28
Nap-of-the-earth flight	Absolute Altimeter AN/APN 209A	1	NA	1000	667	.0015	.02	.02	.0015	7.20	Warranty	–
All	Barometric Altimeter AAU-32/A	1	NA	1500	1100	.0009	.04	.04	.0009	.20	.0009	8.0
All	Barometric Altimeter AAU-31/A	1	NA	1500	100	.0009	.02	.02	.0009	.20	.0009	8.0
All	Crew Seat (Cockpit)	2	NA	1,667	641	.0016	.35	.35	.00031	16.0	–	–
All	APU	1	NA	895	25	.040	.36	.44	.0036	1.5	.0036	160
All	Clock, PDMME-367-3	2	NA	NA	3000	.00035	.02	.02	0	0	.00035	1.0
All	Sealed Lead Acid Battery (SLAB)	1	NA	9,843	588	.0017	1.5	1.5	.0017	1.5	.0017	1.5
All	Pitch Control Rod Ends:											
All	Main Rotor Upper	4	NA	16,542	1,700	.00059	1.79	1.79	NA	NA	NA	NA
All	Main Rotor Lower	4	NA	40,000	2,200	.00045	1.79	1.79	NA	NA	NA	NA
All	Tail Rotor Inner	4	NA	32,254	1,500	.00067	1.69	1.69	NA	NA	NA	NA
All	Tail Rotor Outer	4	NA	40,000	2,200	.00045	1.69	1.69	NA	NA	NA	NA

TABLE II
MISSION RELIABILITY VALUES FOR GFP

	QUANTITY INSTALLED	AIRCRAFT SHIP SET λ/1000	ENVIR FACTOR	USAGE FACTOR	TOTAL λ/1000
SEALED LEAD–ACID BATTERY	1	.10	1.0	1.000	.100
VHF AM/FM RADIO	1	1.36	2.5	.056	.190
VHF FM RADIO	2	.31	1.0	1.000	.310
UHF RADIO	1	.67	2.5	.056	.094
ICS CONTROL	5	.09	–	–	–
ADF SYSTEM	1	.49	–	–	–
GYRO MAG COMPASS	1	.62	2.5	.006	.009
TRANSPONDER	1	1.00	2.5	.003	.008
DOPPLER	1	2.86	2.5	.003	.021
DISPLACEMENT GYRO	2	1.33	2.5	.006	.020
HANDSET	1	–	–	–	–
BAROMETRIC ALTIMETER (31)	1	.67	2.5	.006	.010
BAROMETRIC ALTIMETER (32)	1	.67	–	–	–
CIS PROCESSOR	1	.03	1.0	1.000	0.030
T700 ENGINE	2	5.28	1.0	.602	3.179
ABSOLUTE ALTIMETER	1	1.00	2.5	.300	.750
CREW SEAT	2	–	–	–	–
PC ROD END BEARINGS	16	.22	1.0	1.000	.22
APU	1	1.12	1.0	1.000*	1.12
CLOCK	1	N/A			
				TOTAL	6.054

* Defined as used for all missions.

TABLE IIA
GFP CORRECTIVE MAINTENANCE VALUES*

DESIGN GROUP	GFP INHERENT CORR MAINT ACTIONS PER HOUR
SEATS/EMERGENCY EQUIP	.00500
PC ROD END BRGS	.00218
ENGINES	.01183
APU	.00202
AVIONICS (INCL SLAB)	.02414
TOTAL GFP	.04517

* DERIVED FROM UMSDC: 45 KFH; 98 A/C; SNs 88 THROUGH 92; GFP CONTRIBUTION TO MTBF REQUIREMENT IN PARAGRAPH 3.2.3.3.

GFP TOTAL	.04517	
CFE TOTAL	.13626	
GRAND TOTAL	.18143	MTBF = 5.5 HRS

NOTES FOR TABLE I

1. Reliability and Maintainability values provided are for each individual system listed. Refer to 3.1.4 for the numbers of each system to be installed or to have complete provisions within the aircraft and a breakdown of components comprising each system for developing math models.

2. Inspection requirements, in accordance with the definitions as stated in 3.2.4.5.

   a. All GFP avionics equipment (includes the Displacement Gyro)

      (1) Aviation Unit requirements: 10 hour inspections (including a power-on check) – 28 manminutes, periodic inspection – 3 manhours. The periodic inspection requirement is time to remove the installed equipment for bench test and install available spares. Total aircraft downtime, 3 hours.

      (2) Intermediate support requirements: periodic inspection – 18 manhours. This time is allocated for bench checking avionic equipment.

   b. Engine: 10-hour inspection time – 3 manminutes, periodic inspection – 1.67 manhours. Both 10 hour and periodic inspections are to be performed at aviation unit maintenance level. All time stated here and in Table I are per engine. Total preventive maintenance requirements for an engine is to be 0.03 maintenance manhours per operating hour.

3. Mean time between failures (MTBF) and repairs per operating hour are in equipment operating hours. All avionic/communication equipment shall have an operating hour/flight hour ratio of 1.1 for MTBF Corrective Maintenance Calculation. The operating hour/flight hour ratio for the engine shall be 1.3 for MTBF Corrective Maintenance Calculation. MTBF for mission abort and flight safety calculations shall use the required operating time during a mission as determined by the contractor's system design. The overall mission reliability failure rate for Government Furnished Property (GFP) is allocated at 6.054 failures per 1000 flight hours as indicated in Table II. The overall corrective maintenance rate for Government Furnished Property (GFP) is determined to be 0.04517 inherent corrective maintenance actions per hour as indicated in Table IIA.

4. Data provided does not include factors for redundancy between units or integration/installation of Government Furnished Property (GFP) into the UH-60L.

   a. Flight safety incidents due to GFP are dependent on a combination of at least two single non-flight safety failures which together may cause a single flight safety failure. Specific combinations are dependent on the integration design which is the responsibility of the contractor.

   b. Mission aborts are not dependent on combinations. Certain single items may cause a mission abort. In addition, combinations of single non-mission abort failures may cause a single mission abort.

   c. GFP avionics MTBF values are for a laboratory environment.

3.2.3 (Cont'd)

5. Aviation Unit Corrective Maintenance (CM) and Mean time to repair (MTTR) are directly applicable to aircraft downtime.

6. Wartime and peacetime terms are defined by the missions listed within 3.1.2 of this specification. Non–CONUS for mission applicability represents all wartime missions plus any peacetime missions performed outside of CONUS.

7. Glide slope marker beacon is applicable only to IFR landings for mission reliability only.

8. The notations, inflight shutdowns and accidents, only apply to engine Flight Safety Reliability. The values provided are for each engine. Each engine has failure modes which directly cause a flight safety failure (accident) and modes which require combination with the other engine to cause a flight safety failure (inflight shutdown).

9. Manhours per event at Aviation Intermediate maintenance level and depot corrective maintenance includes time to maintain test equipment prorated to each equipment corrective action.

10. Aviation Unit CM does not include any removal/replacement time. This is a responsibility of the aircraft system contractor.

11. Nap–of–the–earth flight is expected to be used 30 percent of the time during a troop assault mission.

12. Values for the GFP pilot/copilot seats are based upon, and assumed to be equivalent to, the previously supplied CFE seats.

13. The ratio of Aircraft operating hours to APU operating hours is 4:1.

14. Values for the GFP aircraft clock are based upon, and assumed to be equivalent to, the previously supplied CFE clock.

3.2.3.1 Mission Reliability. The aircraft system shall have a mission reliability of not less than .987830 for a mission of one flight hour duration. Mission reliability is defined as the probability of completing a mission and landing at a predetermined area without occurrence of an equipment chargeable malfunction/failure that is cause for a mission abort, given that the equipment was operationally ready at the start of the mission.

Missions are to be presumed to start when the aircraft flight crew starts their preflight inspection and end upon engine shut down after completion of the last mission leg. Equipment malfunctions/failures chargeable in determining mission reliability shall be:

a. Aircraft chargeable malfunction/failures for applicable mission essential components that must be corrected before take-off which are discovered by the flight crew after the start of the preflight inspection to initiate the mission and corrective maintenance cannot be accomplished within 30 minutes clock time after discovery of the malfunction/failure.

b. Aircraft equipment chargeable malfunctions/failures occurring within the period from take-off and equipment shut down upon completion of the last mission leg which causes discontinuance of the mission and landing at other than intended locations.

c. Chargeable malfunctions/failures of ground support equipment required during the mission which extends the aircraft turn around or loading time by 10 percent at preplanned intermediate landing areas required during the mission. Failure of multiple purpose Government furnished ground support equipment such as refueling trucks, ammunition loaders, etc. are not included in this requirement.

3.2.3.2 Flight Safety Reliability. The aircraft system shall have a mission configuration flight safety reliability equivalent to not less than .999976 for a mission defined in 3.2.3 of one hour duration. Flight safety is defined as the probability of completing a mission without occurrence of an equipment malfunction/failure which is potentially injurious to or results in injury to flight crew, ground crew or passengers, damage to the aircraft or is cause for a forced landing, given that the aircraft is operationally ready at the start of the mission. Missions shall be presumed to start when the aircraft flight crew starts the preflight inspection and to end upon engine shut down after completion of the last mission leg.

3.2.3.3 Aircraft Mean-Time-Between-Failure (MTBF). The aircraft shall have a MTBF of not less than 5.5 aircraft flight hours considering independent chargeable failures only. Independent failures are defined per MIL-STD-721. Chargeable failures are defined in Paragraph 3.2.3. Flight hours are measured from time of aircraft lift-off until touchdown.

3.2.3.4 Major Component Removals. Mean-Time-Between Removal (MTBR) and Mean-Time-Between-Removal-Requiring-Depot Return (MTBRRDR) for major dynamic components and non-dynamic components are based on all chargeable removals for which the maintenance support concept requires component replacement with a like serviceable item. Removals made in accordance with the Contractor approved procedures specified in the maintenance manuals are chargeable for both independent and dependent inherent failures, diagnostic removals as required by the specified maintenance support concept, and scheduled removals. Dependent failures are those failures which result from failures of the components listed in Tables A and B of paragraph 3.2.3.4.1. Removals performed as dictated by the diagnostic equipment (on/off aircraft) and associated maintenance manual criteria that are later found to be no defect removals are chargeable. Dependent removals that result from an aircraft crash (consequential damage) that was caused by an inherent primary failure, are not chargeable. Dynamic components consist of those rotating and nonrotating items in the engine drive train, rotor(s) and rotor controls. Table A, paragraph 3.2.3.4.1 lists inherent values of MTBR and MTBRRDR for the major dynamic components. Table B in paragraph 3.2.3.4.1 provides inherent values of major non-dynamic component MTBR and MTBRRDR.

3.2.3.4.1 Mean–Time–Between–Removal (MTBR)

TABLE A. MAJOR DYNAMIC COMPONENT INHERENT MTBR AND MTBRRDR VALUES

Dynamic Component	Average MTBR (Hours)	(5)(9)	Average MTBRRDR (Hours)	(5)(9)
Swashplate Assembly (1)	6000		6000	
Spindle Assembly (per spindle assembly)	1800		1800	
Main Rotor Blade Assembly (per blade) (2)	1700		1700	
Tail Rotor Blade Assembly (3) Paddle Hours	2500		5000	
Main Gearbox Input Module (per module)	4800		5000	
Main Gearbox Accessory Module (per module)	6200		7000	
Main Gearbox Midsection Module	6300		6300	
Intermediate Gearbox	7500		7500	
Tail Gearbox	3500		3500	
Drive Shafts (per shaft) (4)	15500		15500	
Couplings (per coupling)	22000		22000	
Main Rotor Hub (machined forging only)	5200		5200	
Primary servo (per servo)	2500		2700	
Tail Rotor Servo (8)	3500		3700	
Tail Rotor Hub	10000		10000	
Main Rotor Damper (per damper)	1600		2000	
Pitch Trim Servo Assembly (7)	1600		2300	
Yaw Boost Servo Assembly (7)	3100		3900	
Collective Boost Servo Assembly	4300		4300	
Roll Trim Actuator	2200		2200	
Yaw Trim Actuator	2200		2200	

(1) without scissors and expandable pins.
(2) without de–icing elements, pressure indictor, pressure valve, and tip cap.
(3) without de–icing elements and tip cap.
(4) without bearings and vibration dampers or when a problem other than shaft failure causes oil cooler module removal.
(5) values have been rounded to the nearest 100 hours.
(6) Deleted.
(7) includes SAS Actuator and SAS servo valve.
(8) without pitch change shaft assembly.
(9) engine torque is limited to 100% (2828 hp) when aircraft is operated at airspeeds of 80 kts or more and to 120% (3400 hp) at less than 80 kts.

TABLE B. MAJOR NON-DYNAMIC COMPONENT INHERENT MTBR AND MTBRRDR VALUES

Non-Dynamic Component	Average MTBR (Hours)	(1)	Average MTBRRDR (Hours)	(1)
Hydraulic Power Module (per module)	2400		2800	
Generator - Main (per generator)	3500		3500	
Vertical Situation Indicator	2500		2500	
Horizontal Situation Indicator	2500		2500	
Pneumatic Starter (per starter)	3000		3000	
Stabilator Actuator (per actuator)	5900		5900	
Tail Landing Gear Strut	900 (2)		900 (2)	
	2300 (3)		2300 (3)	

(1) values have been rounded to the nearest 100 hours. Removals for modifications, cannibalizations, other non-chargeable failures, or to facilitate other on-aircraft maintenance are excluded.
(2) Applicable for Fort Rucker only.
(3) Applicable for the entire Fleet, except Fort Rucker (see (2)).

3.2.3.5 Reliability After Storage. The Mean Time Between Failure (MTBF) as defined in 3.2.3.3, when applied to aircraft components shall not be degraded more than 10 percent due to six month storage in the approved storage container and the components shall not require any maintenance or restoration.

3.2.4 Maintainability. The aircraft shall achieve the maintainability levels stated herein. The stated aircraft maintainability requirements include all GFP with the exception of GFP armament, and any Aircraft Survivability Equipment (ASE) whether Government Furnished or Contractor Furnished, kits, and those equipments for which space, weight, power and complete provisions only have been provided. Data for GFP exclusive of Integration/Installation effects are provided in Table I. Preventative and corrective maintenance tasks shall be assumed to be conducted by Army personnel with a skill level equivalent to that of an Army aircraft maintenance school graduate with six months on the job experience.

Chargeable maintenance times shall be in accordance with MIL-STD-721, and the criteria for chargeable maintenance times, described in 3.2.3 herein. Maintainability values are direct labor hours as defined by TM 38-750-1 excluding labor expended in actual removal of cannibalized parts.

3.2.4.1 Not used.

3.2.4.2 Mean Time To Repair. The Mean Time To Repair (MTTR) the aircraft (repair of aircraft by replacing a component/part or repair of components on aircraft), as defined per MIL–STD–721, shall not be greater than 0.68 hour. Time is defined as total corrective maintenance elapsed time per MIL–STD–721 and repair is all corrective maintenance events including any corrective action during scheduled maintenance. A corrective maintenance event includes the independent failure and any dependent failures resulting therefrom, including GFP failure. The maximum number of maintenance personnel required to perform any corrective maintenance task at AVUM shall be two, except for those tasks which have become three–man tasks under the three–level maintenance concept, with the majority (50%) of corrective maintenance tasks requiring one maintenance man. The maximum number of maintenance personnel required to perform any on–aircraft maintenance task at intermediate support AVIM level shall be three.

3.2.4.3 Mean Time Between Maintenance. The mean time between maintenance of the aircraft for preventative and corrective maintenance shall not be less than 2.96 flight hours. Preventative maintenance includes 10 hour, periodic, and special inspections of aircraft components plus any scheduled inspections. Ten hour inspection procedures shall be designed to allow the aircraft to be operational until periodic inspection is performed. Intermediate inspections shall not be required. The scheduled time between periodic inspections shall be at least 500 flight hours. Ten hour inspections can be assumed to occur every ten flight hours or every 14 days, whichever occurs first, based on the utilizations defined in 3.2.7, with the exception that no 10 hour inspection is required when a periodic inspection is performed. Flight hours are to be measured from time of aircraft lift–off until touch down.

3.2.4.4 Corrective Maintenance Manhours to Flight Hour Ratio. The aircraft corrective maintenance manhour to flight hour ratio shall not be greater than 0.73 for combined Aviation Unit Maintenance and Aviation Intermediate Maintenance. Fault corrective maintenance at AVUM and AVIM levels, exclusive of avionics and weapons subsystems, shall not exceed 0.34 maintenance manhours per flight hour.

3.2.4.5 Inspection and Servicing Maintenance Manhour to Flight–Hour. No more than 1.0 maintenance manhour to flight hour will be required for inspections and servicing for the utilization rate defined in 3.2.7.

3.2.4.6 Turn Around Time

3.2.4.6.1 Replenishment of Expendables and Operational Checks. Assuming the aircraft has returned from a mission without incurring a malfunction/failure, the elapsed time to replenish expendable materials, excluding ammunition, and to perform necessary operational checks in preparing the aircraft for recommitment shall not exceed 0.2 hour utilizing no more than two maintenance personnel. Time for the tasks is from the time when the aircraft is stopped at the designated servicing point and the rotor has stopped turning to the time the pilot initiates his engine start in preparation for take–off.

3.2.4.6.2 Armament Subsystem Loading and Servicing. Assuming that the armament subsystem has incurred no malfunctions/failures during the last mission of the aircraft, the elapsed time to replenish a full load of ammunition and perform necessary servicing or operational checks of the armament system in preparing the end item aircraft for recommitment shall not exceed 12 minutes utilizing no more than two maintenance personnel. The task of loading and servicing of the armament subsystem shall be performed concurrently with and shall not extend the elapsed time for turn–around time of the basic aircraft stated in 3.2.4.6.1.

3.2.4.7 Mission Configuration Change Requirements

3.2.4.7.1 Armament. Elapsed time to install the weapon mounts, weapons, perform necessary adjustment or operational checks, and load the weapons with a full load of ammunition shall not exceed 0.5 hour, utilizing no more than two personnel.

3.2.4.7.2 Aeromedical. Elapsed time to install necessary equipment to configure the aircraft for an aeromedical evacuation mission when installing the kit for the maximum number of litters shall not exceed 0.8 hour utilizing no more than two personnel, assuming equipment for other mission configurations has been either stored or removed. No increase in either elapsed time or number of personnel shall be allowed for the task of reversing the configuration. Tools other than those listed within the standard general mechanic's tool kit shall not be required.

3.2.4.7.3 Troop Seats. Elapsed time to remove all troop seats to reconfigure the aircraft from a troop carrying mission to a cargo carrying mission shall not exceed 0.3 hours utilizing no more than two personnel. Elapsed time and number of personnel to perform the reverse configuration shall be the same. Tools other than those listed within the standard general mechanic's tool kit shall not be required.

3.2.4.8 Not used.

3.2.4.9 Qualitative Maintainability Requirements. Qualitative maintainability requirements shall include, but not be limited to, the following:

a. The calibration accuracy shall be feasible and limited to the level required by the system.

b. The calibration requirements shall be limited to that portion of the instrument scale which is within the operating range.

c. Warning/caution indicators (except master Caution) shall be of the type that remain "ON" until the malfunction or danger is corrected or eliminated.

d. Parts that are physically but not functionally interchangeable shall not be utilized.

e. Each access panel shall be labeled with a number, letter or other symbol for identification and correlation with technical literature.

f. Permanent warning decals or stencils shall be placed on pressurized containers to indicate the fact that they are pressurized.

g. Fungus–proofing shall be applicable in the field without requiring special equipment such as ovens, catalysts, rubber gloves. It shall be removable for making test equipment connections whenever necessary. It shall be nontoxic and non–flammable.

3.2.4.9 (Cont'd)

h. Except for the ice rate meter, it shall not be necessary to interpolate, draw conclusions or perform mathematical computations from indicator readings.

i. Quick disconnects will be provided for electrical connectors and hydraulic, fuel, oil and pneumatic line couplings at all components subject to time replacement, minimum service life, or modular components. To preclude inadvertent disconnection, positive- locking plumbing connectors shall be provided for fuel and oil lines.

j. The aircraft shall be equipped with direct reading oil gauges visible to the ground crew to determine lubricant levels during servicing and to facilitate preflight inspection. The use of special stands or equipment to view oil gages is prohibited.

k. An onboard capability shall be provided to furnish power to all subsystems to allow preflight checks, maintenance inspection, and adjustments without requiring operation of rotor systems or ground power units, except for blade de-ice.

3.2.5 Environmental Conditions

3.2.5.1 Natural Environment. The aircraft will be subjected to worldwide extremes of climate and weather. Specific values for world-wide climatic extremes of temperature, humidity, rain, snow, sand, dust and other environmental factors shall be in accordance with MIL-STD-210 and AR 70-38. The operating environments shall be as specified below for operating extremes of aircraft subsystems.

3.2.5.1.1 Operating Environment. The aircraft subsystems other than avionics stipulated in 3.7.10.19 shall be capable of operating satisfactorily when subjected to the following environments.

3.2.5.1.1.1 Temperature. Each aircraft component shall be capable of operation at the temperature specified below for the stated period of time:

Environmental Temperature (°F)	Percent of Component Design Service Life
-65	10
-25	50
0	100
70	100
100	100
125	50
160	15

3.2.5.1.1.2 Relative Humidity. The aircraft components shall be capable of operating satisfactorily for the stated periods of time when subjected to the following environmental conditions:

	Condition A		Condition B	
Temperature (°F)	Relative Humidity	Percent of Component Design Service Life	Relative Humidity	Percent of Component Design Service Life
70	95	50	95	65
100	40	20	95	50
125	20	15	80	30
160	--	--	20	25

Condition A applies to those systems, subsystems and components of the aircraft for which ventilation is available during operation. Condition B applies to those systems, subsystems and components of the aircraft which are enclosed in compartments which are not ventilated and are subjected to extreme temperatures due to solar radiation and/or other heat sources.

3.2.5.1.1.3 Rain. The aircraft and its related subsystems shall withstand the rainfall conditions below for either operation or storage as noted. Continuous operation of the aircraft and its related subsystems, except for rotor blade erosion protective devices, shall be possible for conditions A and B without degradation in performance or design service life. The rotor blade erosion protective devices shall withstand rain at a 1 inch/hour rate for 6 hours.

The aircraft shall be capable of being exposed to the rainfall rates of C, D and E below while parked and/or stored. The equipment design shall be such that no adverse effects of residual rain shall exist. A water droplet minimum size of 1.5 millimeters shall be assumed.

	Precipitation Cycle		
	Period	Total Accumulation	Intermittent Wind Speed
A.	12 hours	9.50 inches	to 40 mph
B.	1 hour	5.50 inches	to 40 mph
C.	10 minutes	1.50 inches	to 40 mph
D.	5 minutes	1.00 inch	to 40 mph
E.	1 minute	0.45 inch	to 40 mph

3.2.5.1.1.4 Sand. The aircraft and its subsystems shall withstand blowing sand and function satisfactorily for the periods of time and conditions noted below:

Temperature (°F)	Percent of Each Item's Design Service Life
70	2
100	1
125	1
160	1

Wind velocity shall be 35 knots from any direction. Sand density shall be 0.1 gram per cubic foot of air. The relative humidity shall not exceed 30 percent. Each side of the component or subsystem shall have an equal probability of exposure to the blowing sand. The sand shall be assumed to be angular structure, 97% to 99% by weight SiO_2, with minimum and maximum particle size of 0.01 to 1.00 mm respectively.

3.2.5.1.1.5 Snow. The snowload capability of the horizontal surfaces of the aircraft shall be 20 pounds per square foot assuming that the aircraft is not operating and will be cleared of snow between storms. The ambient temperature (4-6 feet above ground) shall be 0° to -50°F and the ground or snow surface temperature shall be -65°F. The above conditions are assumed to be for no wind and apply for storage only. The aircraft shall operate with no adverse effects while being subjected to blowing snow of a crystal size range of 0.02 to 0.4 mm with a median of 0.1 mm to a wind speed of 35 knots and for the temperature (4-6 feet above ground) and percent of design life indicated below:

Temperature (°F)	Percent of Component Design Service Life
-60	2
-25	5
0	10
30	10

The aircraft shall be capable of completing its missions, with no adverse effects, in falling/blowing snow of sufficient intensity to limit visibility to 1/4 mile, at any temperature between -25°F and +35°F and with an optional kit between -65°F and +35°F.

3.2.5.1.1.6 Ice Conditions. The aircraft and subsystems shall be capable of operating in and after exposure to ice, fog, hoarfrost, rime, and glaze conditions (Ref. 3.7.13.2).

3.2.5.1.1.7 Salt Spray. The aircraft and its subsystems shall be capable of operation during and after exposure to salt spray conditions. No degradation in performance or life shall be in evidence for an exposure up to 10 percent of the component design service life.

3.2.5.1.1.8 Fungus. The aircraft and its subsystems shall not show evidence of deterioration and shall be operable and stowable within environments containing the fungus groups described below:

Fungi Group	Name	Serial Number
Group I	Chaetomium globosum	6205
	Myrothecium verrucaria	9095
Group II	Memonomiella echinata	9597
	Aspergillus niger	6275
Group III	Aspergillus flavus	10836
	Aspergillus terreus	10690
Group IV	Penicillium citrinum	9849
	Penicillium ochrochloron	9112

3.2.5.1.1.9 Sunshine. The aircraft and its subsystems shall be capable of being subjected to radiant energy at the rate of 100 to 140 watts per square foot. Fifty to 84 watts per square foot shall be assumed to be in wavelengths above 7800 angstrom units and four to eight watts per square foot shall be assumed to be in wavelengths below 3,800 angstrom units. The duration of the sunlight exposure shall be assumed to be forty-eight continuous hours.

3.2.5.2 Induced Environment. Effects of induced environments to be considered include effect of equipment heat, hot air ducts, acoustic and vibration environments, engine temperatures, engine exhaust impingement in other components and structure, fuel vapors and equipment compartments, conditions induced by storage and aerodynamic loads and temperature induced by carriage of external stores.

3.2.5.2.1 Not used.

3.2.5.2.2 Nuclear Weapons. The aircraft shall not contain special provisions for nuclear hardening.

3.2.6 Transportability. The aircraft shall be capable of transport by all modes and facilities currently used by the Army for shipment of UH-60 aircraft and for facilities and systems scheduled to become operational during the production and operational phases of the UH-60L. Minimum clearance for the helicopter, in the air transportable configuration in C-141B transports, shall not be less than three inches on each side and 1.25 inches on the top. The foregoing include land, sea and air transport modes. (See 3.2.1.2 herein.)

3.2.7 Availability. Availability requirements are based on a flying hour program of 69 hours per aircraft in a 730 hour calendar month. Availability requirements exclude GFP armament, any ASE whether Government Furnished or Contractor Furnished, kits and those equipments for which space, weight, power and complete provisions only have been provided.

3.2.7.1 Inherent Availability (Corrective Maintenance). The aircraft shall have an inherent availability of not less than 0.988 when calculated on an aircraft uptime and downtime basis utilizing calendar time, where downtime consists of only corrective maintenance. The aircraft is considered up whenever the aircraft is not in corrective maintenance.

3.2.7.2 Achieved Availability (Corrective and Preventive Maintenance). The aircraft shall have an achieved availability of not less than 0.948 when calculated on an aircraft uptime and downtime basis using calendar time, where the downtime consists of corrective and preventive maintenance. The aircraft is considered up whenever the aircraft is not in corrective or preventive maintenance.

3.2.8 Not used.

3.2.9 Not used.

3.2.10 Survivability and Vulnerability. Survivability as defined in this detail specification includes vulnerability, reduction of detection, and crashworthiness. (For airframe crashworthiness see 3.2.2.4.4 herein.) Criteria for survivability design shall be as specified in the following paragraphs. (For survivability design features, see 3.7.15 herein.) Specific criteria for flight essential component damage tolerance to ballistics threat impacts are presented in 3.2.2.4.3.2 herein.

3.2.10.1 Threat. The aircraft shall be capable of 30 minutes continuous safe flight after damage from any single hit by a 7.62 mm projectile of any type striking the aircraft in the lower hemisphere plus 15 degrees at a range of 100 meters at 2500 FPS while in hover or cruise flight. The UH–60L shall be capable of 30 minutes continuous safe flight after damage from any single hit by a 12.7 mm API projectile striking the aircraft, except for selected parts defined in the classified attachment in the lower hemisphere plus 15 degrees at 1600 FPS while in hover or cruise flight. Flight essential systems shall also be configured to minimize the vulnerability for impact by a 12.7 mm API at 2600 FPS and for impacts by a 23 mm HEI of 1600 FPS. In addition, the 30 mm HEI, 37 mm HEI and 57 mm HE threat effects and the blast and fragment effects from proximity fused shells and missiles shall be minimized. The minimum vulnerable area for levels for 7.62 mm API, 12.7 mm API, and 23 mm HEI are contained in the classified attachment to this specification, SES 700701.

3.2.10.2 Protection. Backup subsystems shall have the following characteristics: that each be independent of the other, that each subsystem be capable of performing all essential subsystem functions whenever the counterpart subsystem is incapacitated for any reason, and that each be sufficiently separated or located within the aircraft so as to prevent incapacitation of both by the same cause (impact or spalled round, catastrophic mechanical failures, jamming, or fire/overtemperature).

3.2.10.3 External Noise Signature. The noise radiated from the aircraft shall not exceed the values shown herein when measured at a point laterally displaced 200 ft to either side of the flight path with the aircraft at 50 ft height and at 1000 foot horizontal distance of approach at 150 knots true airspeed and design gross weight, and in any direction 500 ft laterally displaced during OGE hover at design gross weight for calm sea level standard atmospheric conditions.

EXTERNAL NOISE LEVEL FREQUENCY (Hz)		SOUND PRESSURE LEVEL (db) (db REFERENCE = 0.0002 dyne/CM2)	
BAND	CENTER	HOVER	150 KTAS CRUISE
Overall*		96	100
22.4–44.7	31.5	87	92
44.7–89.2	63	89	95
89.2–178	125	89	94
178–355	250	89	91
355–709	500	89	82
709–1410	1000	85	79
1410–2820	2000	80	77
2820–5630	4000	75	75
5630–11200	8000	70	73

* Overall is the energy summation in the frequency range of 22.4–11200 Hz. (For internal noise levels, refer to 3.2.12 herein.)

3.2.10.4 Infrared (IR) Suppression Requirements. The aircraft's IR signature shall be defined to be composed of two components. The first component is that IR signature resulting from IR radiation emitted from the non–operating aircraft's viewable surfaces. This IR signature is intrinsic to the aircraft. The second component is that IR signature resulting from IR radiation emitted both directly and indirectly from hot metal and exhaust gas sources caused specifically by flight operation of the aircraft.

Hover IR suppression, including specific aircraft design features to reduce the aircraft's IR signature, shall be provided. The HIRSS shall be designed to reduce the aircraft's second component of IR signature as defined above, in hover and forward flight. When measured and determined at any aspect in the manner described in the Airworthiness Qualification Specification, the aircraft IR signature in the 3.0 to 5.0 micron spectral bandpass shall not exceed the values measured and reported in TM6–125–108 except as described in Interface Memorandum GE–SA–16–1348. (See 3.7.10.24 and 3.7.10.25 herein for warning and countermeasure equipment.)

The HIRSS shall consist of a core assembly, a baffle assembly, engine nacelle cooling air inlet shrouds, and nacelle and airframe attachments. The core assembly serves to mix, cool, and direct the exhaust air overboard, while the baffle assembly and nacelle cooling air inlet shrouds prevent direct line of sight into high temperature regions of the engine. The HIRSS shall meet the requirements of SES–700008, CIDS as defined in paragraph 2.2.2 herein.

3.2.10.4.1 Hover IR Engine Compartment Cooling. The installation of the Hover IR suppressor shall not result in engine compartment temperatures exceeding those limits specified in 3.7.5.6 herein.

3.2.10.4.2 Hover IR Miscellaneous Compatibility Requirements. The Hover IR suppressor shall be compatible with the aircraft/ engine in respect to structural, vibration and handling qualities and shall meet requirements applicable to the exhaust subsystem as specified in 3.7.5.5.

3.2.10.5 Not used.

3.2.10.6 Not used.

3.2.10.7 Thermal Effects. Secondary thermal effects as a result of projectile impact shall be minimized throughout the entire airframe. These thermal effects include burning of fuel, hydraulic fluid, oil, etc. or "torching" from a damaged engine. The design shall prevent fire and/or explosions in all areas of the airframe where failure to do so would cause a forced landing.

3.2.11 Useful Lives

3.2.11.1 Fatigue Life. The minimum fatigue life of all life-limited dynamically-loaded components of the aircraft, with and without the ESSS including the 230 and 450 gallon external fuel tanks, shall be at least 10,000 operating hours except for bearings and the following list of components:

Component	Fatigue Life (Hours)
MR Hub	5100
MR Cuff (six-lug) and Attachment Bolts	5000
MR Expandable Blade Pin	4700
MR Spindle (with Tie Rod)	8000
MR Blade	9600
TR Pitch Control Link Bearing	9500
TGB Output Shaft	5000
Servo Beam Railing	*

* Above 10,000 hours provided 500 hour visual inspection is performed.

NOTE: Fatigue lives shall apply only if engine torque is limited to 100% (2828 HP) when operating at airspeeds of 80 KTAS or more and to 120% (3400 HP) below 80 KTAS.

The complete flight profile for determination of fatigue life shall be in accordance with the following: Distribution of Flight Regimes, Gross Weight, Altitude and Rotor Speeds is as follows:

3.2.11.1 (Cont'd)

Distribution of Flight Regimes	% Time
Forward Flight Maneuvers	
1 Right Turn	5.00
2 Left Turn	5.00
3 Pullups & Pushovers	.31
4 Autorotation Turn	.42
5 Autorotation Pullup & Pushovers	.03
6 Takeoff (400)	.67
Gusts	1.55
Level Flight	
1 Steady State Power On	66.48
2 Control Reversals (800)	.37
3 Power Transition (80)	.07
4 Acceleration/Deceleration	3.30
Descent	
1 Autorotation–Steady	1.30
2 Partial Power Descents	2.50
3 Autorotation–Landing	.39
4 Autorotation–Control Reversals (80)	.03
5 Landing Approach (500)	.56
6 Power Dives	2.32
Ascent	
1 Takeoff Power Climb	1.05
2 Full Power Climb	3.15
Hovering	
1 Steady Hovering (330)	1.76
2 Hovering Trim (330)	1.10
3 Control Reversal	.14
Sideward	1.00
Rearward	.50
Ground Condition	1.00

Distribution of Flight Regimes used to Develop Fatigue Load Spectra	
Symmetrical Maneuvers	
3, 5 Pullups & Pushovers	.34
1, 2, 4 Turns	9.36
6 Takeoff	.67
Gusts	1.55
1–4 Level Flight	69.22
1–4 Yawing Nose Right & Left	1.00
Descent	
1, 3, 4 Autorotation	1.72
2, 5 Partial Power	3.06
6 Power Dives	2.32
1, 2 Ascent	4.20
Hovering	
1, 3 Steady	1.90
2 Turns	1.10
Sideward	1.00
Rearward	.50
Ground Condition	1.00
Rolling Maneuvers	1.05

NOTE: Numbers in parentheses are maneuvers per 100 flight hours

Gross Weight W/O ESSS	% Aircraft Life	Altitude	% Aircraft Life	Main Rotor Speed
13,016	40	0–1000 ft	25	Use ΩR= 725.09 fps (100% Nr) except descent–auto regime where ΩR = 761.34 fps (105% Nr)
16,825	40	1000–5000 ft	55	
22,000	20	5000–10,000 ft	20	

3.2.11.1 (Cont'd)

Flight Profile in Percent Service Life
SPEED SPECTRUM

Forward Level Flight	Percent
0.1 V_H	3
0.2 V_H	2
0.4 V_H	4
0.5 V_H	4
0.6 V_H	5.5
0.7 V_H	6
0.8 V_H	20
0.9 V_H	30
1.0 V_H	15
1.2 V_H	5
Sideward and rearward flight	1.5
Hovering	3
Ground conditions	1
	100

UH−60L FATIGUE SUBSTANTIATION SPECTRUM

Maneuver	Total % Time	Steady State % Covered in Spectrum	Transient % Unique to NOE	Seconds Per Unique Maneuver	Maneuvers* Per 100 Hrs
Quick Stop from Side Flt	0.3	0.2	0.1	5	72
Kick Out from Side Flt	0.3	0.2	0.1	2	180
Dash/Quick Stop	0.6	0.5	0.1	7	51
Pop−Ups	0.9	0.5	0.4	5	288
Side Flare & Kick−Out	1.2	0.8	0.4	6	240
Terrain Turn (20−60 Kts)	3.0	1.0	2.0	8	900
Terrain Pull−Up	1.0	–	1.0	3	1200
Terrain Push Over	1.0	–	1.0	3	1200
Turn from Hover (L&R)	0.6	0.6	–	–	
Side to Side Flt (L&R)	0.3	0.3	–	–	
Sideslips	1.2	1.2	–	–	
TOTAL	10.4	5.3	5.1**		

$$* \quad 3600\frac{\text{Sec}}{\text{Hr}} \times \frac{1}{\frac{\text{Sec}}{\text{Maneuver}}} \times 100 \text{ Hrs} \times \%(\text{Decimal}) = \frac{\text{Maneuver}}{100 \text{ Hrs}}$$

** If calculated fatigue damage from unique NOE maneuvers is greater than 5.1% of the UH−60L conventional spectrum damage, NOE will be used in the component retirement time calculation; otherwise NOE will not be used.

3.2.11.1 (Cont'd)

MANEUVERING SPECTRUM

Peak Load Factor (g at c.g.)	Average Time at g level (sec)	Cumulative Exceedances per 5000 hours
3.00	.8	100
2.75	1.2	500
2.5	1.7	1,000
2.25	2.8	2,000
2.00	4	4,500
1.75	6	10,000
1.5	10	20,000
1.25-.75 (See Note 4)		
1.25	12	145,000
.75	4.2	60,000
.50	2.8	8,000
.25	2.5	1,000
.00	2.0	200

NOTE: Maneuvers shall be distributed as follows:

1. 60 percent unsymmetrical maneuvers.
   40 percent symmetrical maneuvers.

2. Climb and descent time shall be distributed as follows: 5 percent of level flight/moderate maneuvering time in ascending mode. 8 percent of level flight/moderate maneuvering time in descending mode.

3. Gross weight shall be distributed for aircraft without ESSS as follows:
   40 percent of life at basic structural design gross weight (16,825 lbs.).
   40 percent of life at basic structural design gross weight-payload and 50 percent fuel (13,016 lbs.).
   20 percent of life at maximum alternate gross weight (22,000 lbs.).

   Gross weight shall be distributed for aircraft equipped with ESSS as follows.:
   50% of life at basic structural design gross weight (16,825 lbs.)
   47% of life at maximum alternate gross weight (22,000 lbs.)
   3% of life at four full external tank ferry configuration (24,500 lbs.)

4. The time allotted to level flight with moderate maneuvering (0.75 to 1.25g) shall not exceed 85 percent of the useful life.

5. The minimum time at peak g for turn maneuvers shall be the time required to effect a 60 degree heading change at the standard turn rate. The average time per maneuver considering all types of maneuvers shall be in accordance with the center column.

3.2.11.1 (Cont'd)

6. Approximately seven percent of the useful life should be allotted to hovering turns, control reversals accelerations/decelerations, power transitions and autorotation flight.

7. For the dynamic component fatigue life calculations the following shall apply. Droop stop pounding load shall be applied at the rate of five (5) seconds per hour and prorated for severity.

8. This maneuver spectrum has been incorporated into SER-70100 except that the methodology ground rules are amended as follows:

   Lives are calculated for the aircraft configuration without external stores and for the aircraft configuration with external stores installed. The lower value of the two replacement times is recommended.

   The usage prorate for external stores is:

Volcano	5%
Hellfire	5%
Two 230 gallon tank, two 450 gallon tanks or no tanks	82%
Four 230 gallon tanks	5%
Two 230 gallon and two 450 gallon tanks	3%

   For the main rotor shaft, a center of gravity prorate for external stores may be used in which 3% of the time is spent at extreme forward cg (within 1.0 inch of the forward cg limit).

   A prorate for side slip is 50% left and 50% right.

   A prorate for dive speed is 50% to 1.1 V_H and 50% to 1.2 V_H.

3.2.11.2 Mean-Time-Between-Removal. End item aircraft dynamic components shall have a mean-time-between removal of 1500 flight hours or more.

3.2.11.3 Airframe Major Overhaul. The airframe shall not require overhaul in less than 8,000 flight hours excluding battle or crash damage. This shall apply only if external lift operation usage with sling loads over 8,000 pounds and up to 9,000 pounds is limited to 2.5%.

3.2.12 Internal Noise Levels. Average aircraft internal steady-state noise levels during straight and level normal cruise (140 KIAS, 100% Nr, 75% Q, 16,450 lbs gross weight) and maximum continuous power cruise (155 KIAS, 100% Nr, 100% Q, 16,450 lbs gross weight) with all doors, windows, and vents closed shall not exceed 106.5 dBA and 109.4 dBA, respectively. The average aircraft noise level is determined from seated head height measurements at six locations: pilot, copilot, right and left gunner right and left rear troop seats. (For external noise levels, refer to 3.2.10.3 herein.)

3.3 Design and Construction.

3.3.1 Materials, Processes and Parts. The Sikorsky Aircraft Materials and Processes Specification Index (M&P Index), dated October 1976, with subsequent revisions, deletions or additions shall list the approved government, industry and contractor material and process specifications utilized during the manufacture of the weapon system, or its spares. This Material and Process Specification Index shall list, and be used to determine, the appropriate revision level of all materials and processes specified.

3.3.2 Electromagnetic Radiation

3.3.2.1 Electromagnetic Radiation Compatibility. The Electromagnetic Compatibility (EMC) among all installed subsystems and equipment internal to the system as well as between the aircraft and supporting subsystems external to the aircraft such as ground support equipment (GSE) shall exist, with exceptions, as demonstrated and reported in test reports SER-70155, SER-70987, and SER-701996. All subsystems and equipment shall meet specified performance requirements when operated simultaneously with any single or multiple combination of subsystems and equipment. This requirement applies for all specified modes of operation for each subsystem and equipment.

3.3.2.2 Electromagnetic Vulnerability. Aircraft EME hardening modifications as incorporated by ECP 0384R2 shall be provided except that filterline wiring shall be used with the AN/ARN-147(V) VOR/ILS systems instead of filter pin adapters. When tested in aircraft S/N 81-23549 and S/N 81-23550, which had ECPs 0167, 0299, 0380, and 0423 incorporated, but no mission kits installed, the ECP 0384R2 modifications hardened all CFE subsystems to the electromagnetic environment defined in Table AC.

3.3.2.3 Electromagnetic Interference. Electromagnetic Interference (EMI) qualification of aircraft avionic and electronic subsystems in conjunction with the installation of those systems shall be sufficient to meet the EMC performance described in 3.3.2.1, the EMV performance described in 3.3.2.2, and the system performance described in the applicable sections of this aircraft specification.

All contractor furnished subsystems and equipment shall comply with the requirements of MIL-STD-461 and MIL-STD-462 except as otherwise specified in Table AB.

TABLE AB
Contractor Furnished Equipment EMI
Qualification Exceptions

COMPONENT	BASIC P/N	EMI REQUIREMENT EXCEPTIONS	
Vertical Instrument Display System	70450-01043 (PDU) 70450-021943 (SDC and CDU) 70450-01916 (PDU, CDU and SDC)	CE05-Broadband:	800 KHz to 1.40 MHz: +5 dBμA/MHz 1.40 MHz to 1.60 MHz: +9 dBμA/MHz 1.60 MHz to 4.0 MHz: +5 dBμA/MHz 4.0 MHz to 5.0 MHz: +8 dBμA/MHz
		RS03: 7 V/M threshold at 132 MHz (Fuel Quantity)	
Yaw and Roll Trim Actuators	70400-0226	CE01-Narrowband:	37 KHz-50 KHz: +10 dBμA
		CE04-Broadband:	380 KHz-1.1 MHz: +4 dBμA/MHz 1.1 MHz-1.5 MHz: +2 dBμA/MHz 220 KHz: +2 dBμA/MHz 250 KHz: +4 dBμA/MHz
Stabilator Actuator	70400-06641	CE04-Broadband:	50 KHz-100 KHz: +7 dBμA/MHz
Stabilator/SAS Line Test Set	70700-20650	CE04-Broadband:	2.5 MHz-3.0 MHz: +12dBμA /MHz
30/45 KVA Generator System and 20/23.8 KVA Generator System	70550-02031 and 70550-02032	CE02-Narrowband:	No test limits apply, test conducted for information purposes only.
Anti-Collision Light System	70553-05002	CE04: RE02:	1.4 MHz to 5.0 MHz: +6.2 dB 14 KHz to 1 GHz: +55 dB
VHF/FM Coupler	70600-01010	RE02:	Coupler test frequencies exempt from the test limits.
SAS/FPS Computer	70901-02903	CE02: CE04: CE05: RE02: RS03:	14.4 KHz to 50.0 KHz: +10 dB 50 KHz to 100 KHz: +9 dB 2 MHz to 6.6 MHz: +24 dB 50 KHz to 15 MHz: +36 dB 150 KHz to 25 MHz: +32 dB 25 MHz to 200 MHz: +8 dB 30 MHz to 53 MHz: 5 V/M threshold 54 MHz: 2 V/M threshold 55 MHz to 200 MHz: 5 V/M threshold 300 MHz: 5 V/M threshold
APU Line Test Set	H296A-1 (Howell)	CE04: CE05: RE02: RS03:	900 KHz to 4.8 MHz: +12 dB 900 KHz to 4.8 MHz: +2 dB 900 KHz to 4.8 MHz: +10 dB 60 MHz to 400 MHz: 3 V/M threshold

TABLE AB (Cont'd)
Contractor Furnished Equipment EMI
Qualification Exceptions

COMPONENT	BASIC P/N	EMI REQUIREMENT EXCEPTIONS
De-Ice Tail Rotor Slip Ring	70550-02129	CE02-Narrowband: 10 KHz to 50 KHz: +13 dBμA CE04-Broadband: 50 KHz to 50 MHz: +34 dBμA/MHz RE02-Broadband: 14 KHz to 6.5 MHz: +34 dBμV/M/MHz
De-Ice Controller and Distributor	70550-02126 and 70550-02127	RE02-Broadband: All switching transients shall meet the limits of Figure 18 of MIL-STD-461A, Notice 4.
Stabilator Amplifier	70902-02001	CE01-Narrowband: 30 Hz to 150 Hz: +11 dBμA CE02-Narrowband: 37.5 KHz, 46 KHz, and 49 KHz: +3 dBμA CE05-Broadband: 120 KHz to 2 MHz: +25 dBμA/MHz RE02-Broadband: 14 KHz to 250 KHz: +22 dBμV/M/MHz
Dimming Unit Assembly Controllable Search Light	70553-61803	CE01 CE04 CE07 RE02 Alternating mode (continuous cycle from dim to full bright)

3.3.2.4 Static Electricity. The aircraft shall be designed to prevent static electricity from degrading system effectiveness such that the performance requirements of this aircraft specification are met. Static dischargers shall be installed on the aircraft.

3.3.2.5 Electrical Bonding/Grounding. Electrical bonding and grounding provisions for aircraft systems shall be in accordance with test reports SER-70155, SER-70987, and SER-701996.

All electrical and electronic units or components which produce electromagnetic energy shall be installed so as to provide a direct current (DC) resistance of 2.5 millohms or less per single interface where an enclosure-to-shelf attachment or a shelf-to-rack attachment or a shelf-to-aircraft structure attachment would each represent a single interface. The electrical bonding method used shall not interfere with the installation or removal of equipment. The cases of all power contactors and the battery shall be isolated from ground. Lightning protection shall be as specified in 3.3.5 herein.

3.3.2.6 Hazards of Electromagnetic Radiation to Ordnance (HERO). The system shall include provisions to protect ordnance subsystems from inadvertent ignition or dudding caused by electromagnetic radiated energy. All wiring, cabling, and hardware associated with the ordnance subsystems shall be designed to minimize stray pickup that would result in undesirable energy. All modes of operation during the mission, including loading, unloading, checkout and prelaunch shall be considered in the design. For the purpose of this aircraft specification, the term ordnance includes weapons, rockets, explosives, electro-explosive devices, squibs, flares, chaff, igniters and explosive bolts. A minimum 16.5 dB safety margin shall be provided for all electro-explosive devices (EEDs) when installed in their in-flight configuration and monitored against the electromagnetic environment produced by on-board transmitters and equipment.

TABLE AC
Aircraft Electromagnetic Vulnerability Spectrum

FREQUENCY (MHZ)	MODULATION		PULSE WIDTH (MICRO SEC)	PRF (HZ)	ANTENNA POLARIZATION
35 KHZ	AO	AM			V
122 KHZ	AO	AM			V
595 KHZ	AO	AM			V
1.14	AO	AM			V
1.5	AO	AM			V
2.15	AO	AM			V
3.237	AO	AM			V
4.040	AO	AM			V
4.805	AO	PO	833.3	300	V
5.385	AO	PO	833.3	300	V
6.4	AO	PO	833.3	300	V
6.97	AO	PO	833.3	300	V
7.595	AO	PO	833.3	300	V
7.99	AO	PO	833.3	300	V
9.05	AO	PO	833.3	300	V
9.803	AO	PO	833.3	300	V
11.0645	AO	PO	833.3	300	V
12.045	AO	PO	833.3	300	V
13.53	AO	PO	833.3	300	V
15.00	AO	PO	833.3	300	V
16.06	AO	PO	833.3	300	V
17.048	AO	PO	833.3	300	V
18.086	AO	PO	833.3	300	V
19.270	AO	PO	833.3	300	V
20.510	AO	PO	833.3	300	V
21.46	AO	PO	833.3	300	V
23.18	AO	PO	833.3	300	V
24.45	AO	PO	833.3	300	V
26.875	AO	AM			V
27.375	AO	AM			V
27.875	AO	AM			V
28.375	AO	AM			V
28.875	AO	AM			V
29.375	AO	AM			V
30.0	AO	FM			V/H
35.0	AM	FM			V/H
40.0	AM	FM			V/H
45.0	AM	FM			V/H
50.0	AM	FM			V/H
55.0	AM	FM			V/H
60.0	AM	FM			V/H
65.0	AM	FM			V/H
70.0	AM	FM			V/H
75.0	AM	FM			V/H

TABLE AC
Aircraft Electromagnetic Vulnerability Spectrum

FREQUENCY (MHZ)	MODULATION		PULSE WIDTH (MICRO SEC)	PRF (HZ)	ANTENNA POLARIZATION
80.0	AM	FM			V/H
85.0	AM	FM			V/H
95	AM	FM			V/H
105	AM	FM			V/H
115	AM	FM			V/H
125	AM	FM			V/H
135	AM	FM			V/H
140	AM	FM			V/H
142	AM	FM			V/H
144	AM	FM			V/H
146	AM	FM			V/H
148	AM	FM			V/H
150	AM	FM			V/H
152	AM	FM			V/H
153.5	AM	FM PO	20	200	V/H
156	AM	FM			V/H
158	AM	FM			V/H
160	AM	FM			V/H
170	AM	FM			V/H
180	AM	FM			V/H
182.25	AM	FM PO	20	150	V/H
190	AM	FM			V/H
200	AM	FM			V/H
210	AM	FM			V/H
215	AM	FM PO	20	100	V/H
220	AM	FM			V/H
225	AM	FM			V/H
230	AM	FM			V/H
235	AM	FM PO	20	100	V/H
240	AM	FM			V/H
250	AM	FM			V/H
260	AM	FM			V/H
270	AM	FM			V/H
275	AM	FM			V/H
280	AM	FM			V/H
285	AM	FM			V/H
290	AM	FM			V/H
295	AM	FM			V/H
300	AM	FM			V/H
305	AM	FM			V/H
310	AM	FM			V/H
315	AM	FM			V/H
320	AM	FM			V/H
325	AM	FM			V/H
330	AM	FM			V/H

TABLE AC
Aircraft Electromagnetic Vulnerability Spectrum

FREQUENCY (MHZ)	MODULATION		PULSE WIDTH (MICRO SEC)	PRF (HZ)	ANTENNA POLARIZATION
340	AM	FM			V/H
350	AM	FM			V/H
361	AM	FM			V/H
370	AM	FM			V/H
380	AM	FM			V/H
390	AM	FM PO	20	100	V/H
400	AM	FM			V/H
425	AM	FM PO	20	100	V/H
450	AM	FM PO	20	100	V/H
500	AM	FM			V/H
550	AM	FM			V/H
600	AM	FM			V/H
650	AM	FM			V/H
700	AM	FM			V/H
750	AM	FM			V/H
800	AM	FM			V/H
850	AM	FM			V/H
910	AM	FM PO	20	100	V/H
950	AM	FM			V/H
1000	AM	FM			V/H
1300	AM	FM PO	20	250	V/H
2900	AM	FM PO	20	250	V/H
3300	AM	FM PO	20	250	V/H
5650	AM	FM PO	20	250	V/H
8600	AM	FM PO	20	250	V/H
9200	AM	FM PO	20	250	V/H
14000	AM	FM PO	20	250	V/H
20000	AM	FM PO	20	250	V/H
25000	AM	FM PO	20	250	V/H
30000	AM	FM PO	20	250	V/H
35000	AM	FM PO	20	250	V/H
40000	AM	FM PO	20	250	V/H

NOTE: The field intensity shall be 200 V/M (average) at the position of the skin of the aircraft, when the aircraft is not present.

3.3.3 Nameplates, Product Marking and Finish

3.3.3.1 Nameplates and Product Marking

3.3.3.1.1 Identification and Modification Plates. Identification and modification plates shall be provided on major structural assemblies and spare parts of aircraft.

3.3.3.1.2 Aircraft Nameplate. An aircraft nameplate shall be provided in each aircraft. The plate shall be mounted either on the pilot's instrument panel or on a main structural member in the cockpit so as to be plainly visible when looking into the cockpit from the left side.

3.3.3.2 Finish

3.3.3.2.1 Exterior Color. The exterior finish of the aircraft, except for the main and tail rotor blades shall be low reflective camouflage paint, aircraft green.

3.3.3.2.2 Interior Color. Interior color shall be applied as described in paragraph 3.7.12.1.

3.3.3.2.3 Insignia and Marking. Insignia and marking shall be provided.

3.3.4 Interchangeability and Replaceability. Parts and assemblies of the aircraft shall be interchangeable or replaceable.

3.3.5 Lightning Protection. Lightning current paths shall be provided throughout the airframe to provide protection of aircraft, crew, and fuel. Direct effects lightning protection shall be provided at the possible lightning entry points identified for the aircraft. Main and tail rotor protection shall be as defined in 3.7.1.2 and 3.7.2.1.2 herein.

3.4 Not used.

3.5 Not used.

3.6 Not used.

3.7 Functional Area Characteristics

3.7.1 Main Rotor Group

3.7.1.1 Description and Components. The main rotor group consists of a four bladed, fully articulated, elastomeric rotor system. The rotor head permits three degrees of freedom, flap, lead lag and pitch. The rotor head also incorporates blade retention, inplane hydraulic blade dampers, blade flap and droop stops, adjustable control rods, swashplate, rotating scissors and a bifilar vibration absorber. Collective and cyclic pitch motion are provided by the swashplate and guide shaft.

3.7.1.2 Blade Construction. Balance weights bonded to the leading edge of the spar shall provide required chordwise balancing. Removable/adjustable balance weights shall be provided at the tip of each blade for adjusting chordwise and spanwise balance. Lightning protection shall be applied to withstand strikes of a maximum of 200,000 amperes. (See 3.3.9.) Flush abrasion strips on the leading edge of each blade shall provide erosion protection against the environment of 3.2.5. The abrasion strips shall not be susceptible to corrosion. Rotor blade tip caps shall be removable for field replacement. A crack detection and indicating system shall be incorporated to provide for monitoring of the structural integrity of the spar during ground inspection. Rotor blades shall be interchangeable individually without the need for a test flight after tracking and balancing in an emergency situation. Rotor blades shall permit limited operation at tree top levels (with ensuing blade strikes by small branches) and within confined areas. Anti–icing and de–icing capability shall be provided in the Main Rotor Blades through installation of electrothermal heating elements in the leading edge of each blade. Main rotor blade de–icing equipment shall include electrical components which provide power and system control for electrothermal de–icing of the main rotor blades. The Blade De–ice system provides a Droop Stop anti–icing capability consisting of 300 watt cylinder shaped, hermatically sealed heaters incorporated into the droop stop hinge pins. The heaters shall be electrically powered by the blade de–ice electrical system.

3.7.1.3 Blade Retention. Each rotor blade shall be connected to the rotor head spindle by means of two quick–release expandable bushing pins.

3.7.1.4 Rotor Head. An elastomeric rotor head consisting of a one–piece hub, a blade retention spindle, elastomeric bearing assembly, blade damper, adjustable control rods, swashplate, rotating scissors and bifilar vibration absorber shall be provided. The blade motions shall be provided by the elastomeric bearing assembly which shall react blade centrifugal, lift, and drag forces while permitting blade pitch, flap, and lag motions. The retention bearing assembly shall be attached to the rotor hub by a bolted flange and connected to the blade by means of a spindle shaft. The retention bearings shall not require lubrication. The field replaceable spindle modules shall be interchangeable.

3.7.1.5 Rotor Controls. The rotor control system shall transmit inputs from the aircraft flight control system to the rotating blades by means of a rotating and stationary swashplate and adjustable control rods.

3.7.1.6 Vibration Absorber. A bifilar vibration absorber mounted on the rotor head shall be provided capable of limiting the amplitude of airframe vibration originating from the main rotor system. The vibration absorber shall not require field adjustment and shall be interchangeable from aircraft to aircraft.

3.7.1.7 Blade Restrainers. Lead-lag stops shall be incorporated in an energy dissipating damper provided for each blade. Droop flap stops shall be incorporated in the main rotor hub. A centrifugally actuated spring balanced droop stop shall be provided to limit blade downward motion at lower rotor speeds. At idle rpm with the controls centered and any permissible aircraft center of gravity loading and landing gear strut/tire pressure serviced at their minimum acceptable values, there shall be an 85 inch minimum blade tip to ground clearance to permit standerect walking under the rotor for the 100th-percentile Army man wearing boots and helmet (including a two inch blade clearance allowance). Blade stops shall be effective in the static condition and at all rotor speeds in order to allow stopping and starting in wind gusts up to 45 knots. A Droop Stop Anti-Icing System shall be provided.

3.7.1.8 Blade Folding. A manual blade folding system capable of operation in wind gusts up to 45 knots shall be provided. Retracking or rebalancing of the blades shall not be required after blade folding. Supports shall be provided as peculiar ground support equipment for blade securing in the folded position. The folded envelope of the main rotor shall be compatible with the elevator of the LPH Class ships to permit on-board stowage and transport of the aircraft.

3.7.1.9 Blade Securing. Blade tiedown equipment shall be provided as ground support equipment. The blades shall be able to withstand a 60-knot wind when extended and secured and a 70 knot wind when folded and secured.

3.7.1.10 Blade Balancing and Blade Tracking. The rotor blades shall be individually prebalanced aerodynamically, dynamically, and statically.

3.7.1.11 Blade Erosion Protection Strip. An erosion-protection strip shall be bonded to the leading edge of the removable tip cap. An erosion protection strip shall be bonded to the leading edge cover skin outboard of 17 percent radius. A replaceable erosion-protection strip shall be bonded over the leading edge strip on the outer 30 percent of the blade. Erosion strips are flush with the surface of the cover skin. The blade erosion strip shall meet the sand and rain erosion design criteria specified in 3.2.5.1.1.3 and 3.2.5.1.1.4 herein.

3.7.1.12 Rotor Brake. Space and power provisions shall be made for a rotor brake.

3.7.1.13 Mechanical Gust Lock. A mechanical gust lock shall be provided on the main gearbox power takeoff flange. A caution light shall be provided in the cockpit to indicate gust lock engagement. The gust lock shall be capable of holding the rotor to prevent rotation in a 45 knot wind or shall be capable of holding the rotor with one engine at ground idle.

3.7.1.14 Rotor Tachometer. A rotor speed pulse pickoff, mounted on an accessory module on the main transmission, shall be provided to permit rotor rpm measurements.

3.7.2 Tail Rotor and Tail Group

3.7.2.1 Tail Rotor.

3.7.2.1.1 Description and Components. The aircraft tail rotor shall be a controllable-pitch, crossbeam rotor as specified herein. The principal structural members of the tail rotor shall be two continuous spars running from blade tip to blade tip, crossing each other at a hub section to form the four rotor blades. The two spars, complete with their two integral blades, shall be individually interchangeable.

3.7.2.1.2 Tail Rotor Blade Construction. Blade pitch shall be provided through the pitch horn to the inboard end of the torque tube which transmits motion to the spar which is torsionally free to rotate. Lightning protection shall be applied to withstand strikes of a maximum of 200,000 amperes. (See 3.3.9.) Anti-icing and de-icing capability shall be provided in the Tail Rotor Blades through installation of electrothermal heating elements in the leading edge of each blade. Tail rotor blade de-icing equipment shall include electrical components which provide power and system control for electrothermal de-icing of the rotor blades.

3.7.2.1.3 Blade Restrainer. The tail rotor blade shall be cantilevered at the root end and shall have sufficient flatwise stiffness to eliminate the need for separate blade restrainers and to prevent damage to the anti-torque (tail) rotor by 70-knot winds when the aircraft is parked.

3.7.2.1.4 Tail Rotor Controls. The tail rotor controls shall operate a non-rotating shaft located inside the output shaft of the tail gearbox. Axial motion shall be transmitted through ball bearings to a rotating shaft extending outward through the gearbox and blades to the pitch control cross beam. Pitch control rods shall be connected from the cross beam to the blade pitch horn, enabling pitch of the four rotor blades to be controlled equally.

3.7.2.1.5 Tail Rotor Blade Folding. A manual tail-rotor-blade indexing capability shall be provided. The outer blade shall be capable of being moved outboard along the pitch-actuator shaft and indexed approximately 90 degrees.

3.7.2.1.6 Blade Tracking and Balancing. Tracking of the tail rotor blades shall not be required. The two blade units shall be statically balanced to permit interchangeability.

3.7.2.1.7 Blade Erosion Protection Strip. A replaceable erosion-protection strip shall be bonded to the leading edge of the cover skin over blade. Another erosion protection strip shall be bonded to the leading edge of the cover skin inboard of the other strip and extend inboard to the end of the blade skin cover. The flush abrasion strips on the leading edge of each blade shall provide erosion protection against the environment of 3.2.5. The abrasion strips shall not be susceptible to corrosion.

3.7.2.2 Tail Group. The tail group shall be as described herein.

3.7.2.2.1 Vertical Pylon. A vertical pylon shall be provided to support the tail rotor. The pylon shall be foldable for air transportability.

3.7.2.2.2 Stabilator. A horizontal stabilator shall be provided of sufficient area to provide positive longitudinal stability.

3.7.3 Body Group

3.7.3.1 Fuselage

3.7.3.1.1 General Description. The fuselage shall include cockpit, mid-fuselage section, transition section, main rotor py lon, and tail cone, as described herein.

The fuselage primary structure shall be aluminum alloy semi-monocoque construction. Sufficient hand-holds, steps, etc. shall be provided to be used by crew personnel climbing in and out of the cockpit and other crewstations of the aircraft.

3.7.3.1.2 Construction. Construction of the aircraft fuselage shall be as described herein:

a. Hardpoints. Hardpoints shall be provided for aircraft tiedown, external stores pylons, internal auxiliary fuel tanks, davit supports, seat structures, litter kits, cargo-restraint system, pintle-mounted machine guns, aircraft hoisting and recovery, cargo tiedown, a rescue hoist, a loaded cargo sling, a maintenance crane, and other aircraft-handling functions. Internal hardpoints shall be provided to accept static line and safety line attachment devices. The hardpoints shall be positioned in the ceiling and floor of the troop compartment.

   Fixed provisions shall be made for a GFP internal high performance rescue hoist. Removable adapter assemblies shall be supplied as part of the Rescue Hoist Kit and shall be used to adapt the GFP hoist mounting brackets to the airframe. The aircraft hoist installation crash load factors shall be 8g forward, 8g aft, 8g down, and 4g up. The hoist operator and assistant medic safety belts may be secured to any of the cargo net and cargo tiedown rings provide d throughout the cabin.

b. Fasteners. All access panels, equipment compartment doors, and access doors throughout the aircraft shall be fitted with latches and/or fasteners which can be released and which lock positively when secured. Fasteners shall not require torquing to any specific value of torque. Design of fasteners shall be such that a positive closed or secured position is determinable.

3.7.3.1.3 Cockpit. The cockpit shall accommodate a pilot and copilot. A cockpit door, hinged at the forward edge to swing out and equipped with a hold-open device, shall be provided at each side of the cockpit. Each door shall have a jettisonable window with a cylinder style snap vent. Each cockpit door shall be jettisonable from within the cockpit for emergency exit with single-action release. Jettison controls shall be accessible to the pilot and copilot with their shoulder harnesses locked in the fully-restrained position. Each door shall employ safeguards to preclude accidental jettisoning. The doors shall be of sufficient size to permit exit to the 95th-percentile aviator wearing normal arctic flight clothing and carrying personal survival equipment and body armor regardless of aircraft attitude on the ground. The floor under each cockpit seat shall accommodate the downward stroking of the Government-furnished crashworthy seats (see 3.7.12.1.1). Cockpit windows shall be of transparent plastic sheet.

3.7.3.1.3.1 Windshield. A three-panel windshield shall be provided for the cockpit enclosure. All windshield panels shall be shatterproof and able to withstand the air loads imposed by flight. All windshield panels shall be electrically heated, inorganic, laminated glass. The surfaces in contact with windshield wipers shall not be scratched if the windshield wiper is activated on a dry windshield. The frame at the junction of the forward cockpit door and windshield shall not be more than 3-5/8 inches wide when projected onto a plane perpendicular to the line between the structure and the pilot's design eye position. The windshields and windows shall be mounted so as to permit thermal expansion/contraction without distortion of each transparent panel or its frame.

3.7.3.1.4 Mid-fuselage. The mid-fuselage shall include the crewchief/gunner stations and troop/cargo compartment as described herein.

A cabin floor shall be provided between stations 247 and 398. It shall be constructed of non-metallic materials except for the seat and cargo-tiedown floor pans and fittings. The floor material shall include an upper layer of cross-ply unidirectional fiberglass, a core of non-metallic honeycomb (Nomex), and a bottom layer of woven fiberglass. The seat and cargo-tiedown pans and fittings shall be installed flush with the cabin floor. Attachment of floor to airframe structure shall be done using a method which will not cause protrusions above floor level.

3.7.3.1.4.1 Crewchief/Gunner Stations. Two crewchief/gunner stations, one on each side of the aircraft, shall be provided aft of the cockpit and forward of the aft-sliding troop/cargo doors. Each crewchief/gunner station shall be a minimum of 34 inches x 34 inches at floor level and the same height as the troop/cargo compartment. The size of the gunner's opening, exclusive of the window fairing shall be 34 inches x 28 inches and shall enable the gunner to meet the field-of-fire requirements of 3.7.11.3.1 herein. The weight of the man and equipment shall be 265 pounds.

A forward sliding hatch incorporating two 29-inch x 9-inch plastic windows shall be provided over the gunner's opening. The windows shall be constructed of shatterproof material and shall be of transparent plastic sheet. Hardpoints for two pintle-mounted machine guns up to .50 caliber shall be provided, one at each of the crewchief/gunner stations. Fittings for the attachment of two removable, load- limited, crashworthy troop/gunner seats shall be provided.

3.7.3.1.4.2 Troop/Cargo Compartment. The troop/cargo compartment shall accommodate 10 troops with the furnishings described in 3.7.12 herein. The dimensions of the troop/cargo area shall not be less than 82 inches wide at the floor, 92 inches wide at the seat level, 108 inches long and 54 inches high with minor structural and drip pan intrusions. Cargo tiedowns shall be provided in the floor and cargo-net tiedowns shall be provided on each sidewall. Hardpoints shall be provided in the floor and overhead to accommodate seat structure and the cargo restraint system requirements. The weight of the man and equipment shall be 265 pounds. The troop/cargo compartment shall accommodate up to six (6) standard folding rigid pole litters (MIL-L-16462) when the ten (10) troop seats are removed. Provisions for the litters shall be included in the Aeromedical Evacuation Kit.

3.7.3.1.4.2.1 Litter Provisions. Litter provisions shall be made for up to 6 litters. Litter provisions shall permit the litters to be loaded on the aircraft with the litter rack oriented laterally for up to 4 litters. Litter support structure, including all litter attachment brackets, shall be crashworthy in accordance with TR 71-22 except that the load factors shall be reduced to account for the basic strength of the litter structure. The minimum load factors, with respect to the fuselage normal axes, shall be:

LOAD DIRECTION*	LATERAL ORIENTATION	LONGITUDINAL ORIENTATION
UP	8G	8G
SIDE	12G	12G
REAR	12G	12G
FORWARD	15G	12G
DOWN	13G	13G

* Litter patient weight shall be per 3.2.2.1.7.

The litter vertical support points shall be located at the stirrups or at a distance no greater than four (4) inches from the stirrups toward the ends of the litter. One of the two removable crew chief/gunner's seats shall serve as the medical attendant's seat. This seat shall be located so that complete access to all litters is possible by a single 95th percentile medical attendant.

3.7.3.1.4.2.2 Doors and Exits. An aft-sliding cargo door shall be provided on each side of the troop/cargo compartment. The doors shall permit loading or unloading of 11 combat-equipped troops in less than five seconds. The cargo door opening shall be 69 x 54 inches.

Simple, single-action door latches shall be provided and shall be placarded to indicate fully open and fully closed positions. Direct entrance and exit for the medical attendant and crewchief with four (4) litter patients in the aircraft shall be provided. Doors and latches shall be capable of being secured in the open position. Each primary rescue entrance and emergency exit shall be identified. Latches and securing devices on the cargo doors shall be positive acting. The cargo doors, less hardware shall be interchangeable between left hand and right hand installations.

3.7.3.1.4.2.3 Windows. Each of the two troop/cargo-compartment doors shall incorporate the jettisonable 24 inch x 24 inch windows. The windows shall be constructed of transparent plastic sheet and shall be shatterproof. The windows shall be interchangeable in both left and right hand cargo doors.

3.7.3.1.4.2.4 Emergency Exits. Emergency exit in the mid–fuselage shall be provided through the two jettisonable windows in each troop/cargo door. The emergency egress provisions shall permit eleven (11) 95th percentile combat equipped troops and the crewchief/gunner to exit in not over 30 seconds with the aircraft resting on its side. Markings shall be provided to identify the cargo door window emergency exits.

3.7.3.1.4.2.5 Crew–served Weapons. Tiedown rings (see 3.2.2.4.1.5 herein) are provided and may be used for securing extra equipment, such as crew–served weapons and other field equipment of the troops, with the troop seats in place.

3.7.3.1.4.2.6 Alternate Seating. Complete provisions shall be made for the accommodation of 13 troops and a crewchief/gunner. Two (2) crewchief/gunner's seats, see 3.7.12.1.2 and ten (10) troop seats shall be provided. When installed, the additional two (2) troop seats, as described in 3.7.12.2.1, shall be considered Useful Load. The field of fire requirements of 3.7.11.3.1 are applicable.

3.7.3.1.5 External Cargo Hook Provisions. Provisions shall be made for an external cargo hook. (See 3.7.14.2.2 herein.) The external cargo hook and its supporting structure shall withstand the load imposed by a 9000–pound external cargo acting through a cone of action with a half angle of 30 degrees and a limit–load factor of 2.22 at the hardpoints. Sling load bounce shall be considered in the design of the cargo hook provisions.

3.7.3.1.6 Not used.

3.7.3.1.7 Transition Section. The transition section shall be located directly behind the troop/cargo compartment and shall connect the midfuselage section with the tail cone. The transition section shall contain the fuel tanks and two equipment compartments.

3.7.3.1.7.1 Equipment Compartments. Two equipment compartments, each 20 x 20 x 40 inches, shall be provided in the transition section and located over the fuel tank compartment. The equipment compartments shall be accessible from the inside of the troop/cargo compartment. The compartments shall be suitable for stowage of tiedown devices, emergency tool kit (60 lbs, 18 inches x 10 1/2 inches x 13 inches), life support equipment and personal gear such as rations, helmets, special protective masks and/or clothing.

3.7.3.1.8 Tail Cone. The tail cone shall interconnect the transition section with the vertical pylon and horizontal stabilator. The tail cone shall support the tail rotor drive shaft and incorporate the tail alighting gear.

3.7.4 Landing Gear

3.7.4.1 General Description and Components. A nonretractable landing gear shall be provided, consisting of a main gear assembly and a tail wheel assembly. The landing gear arrangement shall be such that no abnormal characteristics result from aircraft taxi, takeoffs, and landings at the basic structural design gross weight on terrain with slopes up to 12 degrees. The landing gear shall be capable of ground taxi, towing, ground handling, takeoff and landing roll, and landing, including autorotative landings at design sink speeds in accordance with 3.2.2.4.1.4 herein. Landing gear design shall permit replacement of all wheels. The landing gear shall be designed to prevent ground resonance. The gear shall be fixed and shall incorporate a system (kneeling) to raise or lower the aircraft. Differential or symmetrical kneeling shall be accomplished through the use of an electrically driven hydraulic power cart, P/N 70700–81650–041 (Part of Air Transport Loading Set). The gear system shall have provisions for attachment of flotation and ski devices. The gear flotation capability shall be such as to allow the aircraft to be towed at weight empty, plus full fuel and 200 lbs, across soil with a California Bearing Ratio of 2.5.

3.7.4.1.1 Vertical Force Attenuation in the Landing Gear. The design limit sink speed of the aircraft shall be in accordance with 3.2.2.4.1.4 herein. The landing gear shall be of the load–limiting type and shall be capable of decelerating the aircraft at basic structural design gross weight from a vertical impact velocity of 14 fps without detrimental deformation of the airframe structure and without allowing contact of the fuselage proper with the ground. The center of gravity positions are the forward and aft limits and rotor lift is equal to gross weight. For the 14 fps condition, plastic deformation and damage of the gear and mounting system is acceptable in meeting this requirement; however, the remainder of the aircraft structure shall be flightworthy after such an impact and the landing gear shall provide a load–limiting capability in the transverse (xy) plane of the aircraft. The main landing gear shall be capable of absorbing the energy generated during 30–fps vertical crash at basic structural design gross weight. The aircraft contacts the ground in roll attitudes to ±10° or in pitch attitudes to ±10°. The center of gravity position is the forward limit and rotor lift is equal to gross weight. During this condition, both the airframe and main landing gear may be deformed but the fuselage shall not contact the ground.

During a vertical crash at 38 fps at basic structural design gross weight, the roll or pitch attitude is 10°. The center of gravity position is the forward limit and rotor lift is equal to gross weight. During this condition, the main landing gear shall be capable of absorbing the energy equivalent to a 30–fps crash. The remaining energy shall be absorbed by plastic deformation of the airframe during ground contact. Both the main gear and the airframe may be deformed and no failure of the main gear or airframe shall occur that would allow high mass items to enter the cabin or cockpit or result in more than 15% loss of cabin living space.

3.7.4.1.2 Landing Gear Location. Failure of the landing gear shall not result in failure of any personnel–restraint system or restraint–system tiedown. Failure of the landing gear shall not result in blockage of a door or other escape route or prevent the opening of any door or other escape route.

3.7.4.2 Main Landing Gear. The main landing gear shall include axle and oleo strut assemblies and wheels, brakes, and tires as described herein. The main landing gears shall be located on each side of the aircraft forward of the center of gravity. Each main gear shall be a single wheel, articulated gear, with two–stage oleos, capable of absorbing energy during crash landings. The oleos have a total stroke of 29.25 inches and together are load limited to 11.25 g at the basic structural design gross weight. The main gear oleos and drag beams are interchangeable.

3.7.4.2.1 Wheels and Brakes. Wheels for the main landing gear shall be 26 x 9.5–11. Brakes shall be of the multiple–disc type.

3.7.4.2.1.1 Brake Control Subsystem. Brake control subsystems shall be provided for the pilot and copilot. A brake subsystem incorporating individual master cylinders for the pilot and copilot shall be provided. The system shall incorporate brakes controlled by differential toe pedals for directional control and a parking lock. Equal positive action of the brake subsystem shall be provided when the aircraft is moving forward or aft with the same effort on the brake control. The brake subsystem shall be capable of securing the aircraft on a slope up to 12 degrees at basic structural–design weight. Brake control shall be possible while the aircraft is being towed without requiring the operation of either the APU or the main engines.

3.7.4.2.1.2 Casings. Main wheel casings shall be 26 x 10.0–11 tubeless.

3.7.4.2.2 Shock Absorbers. The shock absorbers shall be the air-oil type. The strut assemblies shall be replaceable as a complete unit and shall be interchangeable left and right without change of major parts. The air valve shall be accessible for inflating the strut.

3.7.4.2.3 Inspection and Maintenance. The landing gear shall be readily removable from the aircraft. An instruction plate for servicing shall be provided on each strut assembly. Wheel and brake assemblies shall be removable and replaceable. Provisions shall be made for servicing. Left and right main landing gear units shall be interchangeable. (For towing provisions see 3.7.14.1.1.)

3.7.4.3 Auxiliary Landing Gear (Tail Wheel). The tail landing gear assembly shall be located below the aft section of the fuselage. The tail gear shall consist of an oleo strut, axle assembly, and a wheel and tire. The gear assembly shall be free of projections or fittings.

3.7.4.3.1 Wheel. The wheel for the tail landing gear shall be 6.00-6. Wheel bearings shall be provided with seals, as required by, so protect wheel bearings from dirt.

3.7.4.3.2 Casing. A 15 x 6.00-6 tube-type casing shall be provided for the tail landing gear.

3.7.4.3.3 Shock Absorber. The shock absorber shall be the air-oil type and shall be replaceable as a complete unit.

3.7.4.3.4 Steering Control. The tail landing gear shall be designed to permit swiveling of the tail wheel through 360 degrees and shall be driven to the trail position by gear caster and aerodynamic loading. Provisions shall be made for locking the tail wheel in the trailing position by means of a lock controlled from the cockpit.

3.7.4.4 Ground Clearances. The level ground clearance for the tail rotor, structure exclusive of the tail wheel, control surfaces, forward jacking points, wire strike protection system, and external stores shall not be less than 16 inches with the aircraft at rest at basic structural design gross weight with the landing gear struts in the normal position, and with normal tire pressure, and not less than six inches with the aircraft in any of the following attitudes:

a. Three-point attitude with lower shock absorber struts fully compressed and all tires flat.

b. Three-point attitude with main wheel shock absorber struts and tires under static deflection and tail wheel lower shock absorber strut fully compressed.

c. With tail down and tail wheel lower shock absorber fully compressed and tire flat, the longitudinal attitude of the aircraft shall be approximately 15 degrees. The lateral attitude shall correspond to that obtained by rotating five degrees, the axis of rotation being parallel to the centerline of the aircraft. The level ground-to-floor height shall not exceed 28 inches. Ground-to-aircraft fuselage clearance shall be at least 16 inches.

3.7.4.5 Inspection and Maintenance. The tail gear shall be removable from the aircraft. An instruction plate for servicing shall be provided in the area of the strut assembly. The tail wheel shall be removable and replaceable.

3.7.5 Propulsion System

3.7.5.1 Description and Components. The propulsion system for the aircraft shall include engines, propulsion system controls, transmission subsystem, starting subsystem, cooling subsystem, fire protection subsystem, fuel subsystem, air induction subsystem, auxiliary power unit, and exhaust subsystem as described herein.

3.7.5.2 Main Propulsion Units. The two engines shall be furnished by the government and installed by the contractor. The GFE engines shall be General Electric Model T700–GE–701C in accordance with E1290. The engine installation requirements shall be in accordance with E1290.

3.7.5.2.1 Residual Fluids. The weight of each turboshaft engine (as installed) shall include an allowance of 7.4 pounds for residual fluids as specified in Model Specification E1290.

3.7.5.2.2 Lubrication Subsystem. The lubrication subsystem shall be an integral part of the engine and shall be as specified in General Electric Specification No. E1290.

3.7.5.3 Engine Driven Accessories. The aircraft does not have engine driven accessories.

3.7.5.4 Air Induction Subsystem. The air inlet subsystem of each engine shall consist of a forward facing inlet duct mounted on the front flange of the engine. The permissible variation in total pressure and total temperature at the engine inlet face shall not be greater than that established by E1290. Interior duct surfaces shall be aerodynamically smooth. The installation shall be such that foreign objects such as water droplets, ice, sand, and dust shall not be retained in the joints. Inspection plates, access doors, fasteners, clamps, and interior plumbing shall not be located inside the inlet duct. Inspection plates and access doors immediately forward of the air intakes if hinged, shall be hinged at the forward edge. The air inlets, except for the ice detector fairing and the inlet shrouds, shall be interchangeable left and right hand.

3.7.5.4.1 Ice Protection Subsystem. An induction anti–icing subsystem utilizing engine bleed air shall be provided; it shall anti–ice the induction system when operating in the icing environments specified in Model Specification E1290. The anti–icing subsystem shall function from sea level to the aircraft service ceiling. Anti–icing protection for the air induction subsystem is provided down to engine powers corresponding to a corrected gas generator speed ($N_G/\sqrt{R}$) of 36500 rpm. The engine air induction anti–icing system and the engine anti–icing system shall be controlled by one switch for the No. 1 Engine installation and one switch for the No. 2 Engine installation. If electrical power to the anti–icing subsystem is lost, it shall remain in, or revert to, the anti–icing ON mode.

3.7.5.5 Exhaust Subsystem. An exhaust subsystem for each engine shall be provided. The exhaust subsystem shall include the HIRSS (refer to 3.2.10.4 for IR suppression requirements). The following specific design requirements apply:

a. Connections and necessary supports shall allow for thermal expansion without damage to the engine or exhaust subsystem.

b. The exhaust subsystem shall not induce loads or moments to the engine in excess of those specified in Model Specification E1290

c. The exhaust subsystem shall not collect fuel, oil, rain, or snow.

d. The exhaust subsystem design shall provide for drainage outside the aircraft structure.

e. Engine exhaust (plume) shall not be visible to ground observers located below the aircraft while the aircraft is hovering.

f. Exhaust gases shall be ducted away from the crew and troop/cargo compartment, fluid drains, air intakes, flammable aircraft components, and ground vegetation and shall not impinge upon any portion of the aircraft.

g. The engine shall be equipped with an exhaust gas flow straightening device.

3.7.5.6 Cooling Subsystem. The engine cooling subsystem shall prevent the temperatures of the engine, engine mounted accessories, engine components, equipment located in the engine compartment, associated structure, and engine fluids from exceeding the maximum allowable limits, provided the atmospheric air temperature is between the cold atmospheric temperature curve and the hot atmospheric temperature curve shown on Figure 35 herein. The maximum allowable temperature limits shall be as specified in the applicable equipment specifications. If the equipment specifications do not specify maximum allowable temperature limits, the temperature limits specified below shall apply:

a. The temperatures of 2024 and 2014 aluminum alloy structures shall not exceed 250°F.

b. The temperature of 7075 aluminum alloy structures shall not exceed 200°F.

c. The temperature of the engine cowling shall not exceed 400°F.

d. The temperature of the engine cowl fittings shall not exceed 400°F.

e. The temperature of the engine cowl support fittings shall not exceed 300°F.

f. The temperature of the engine mounts shall not exceed 800°F.

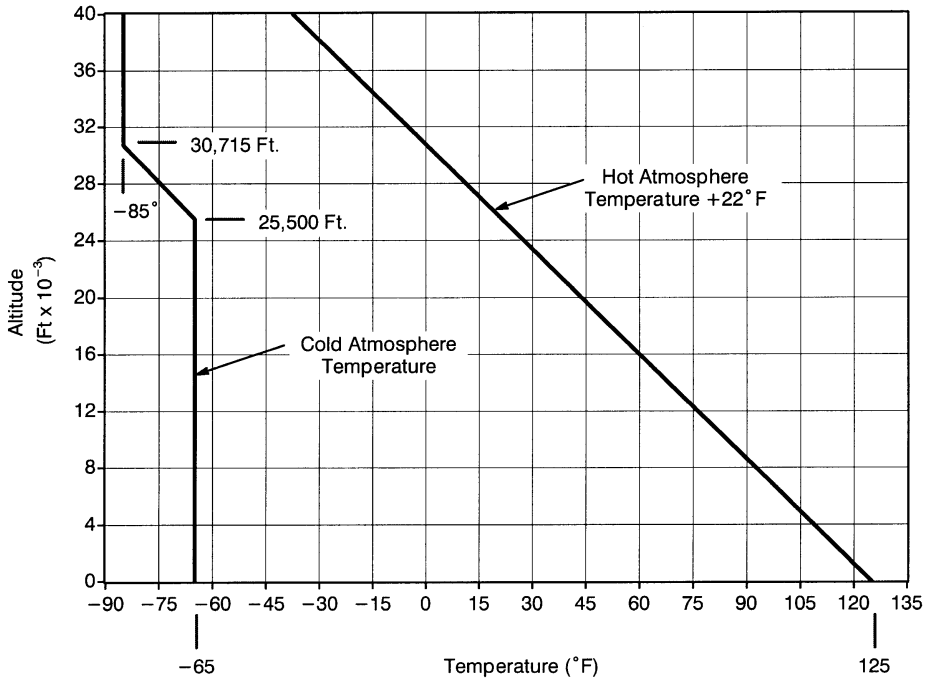

FIGURE 35. HOT/COLD ATMOSPHERIC TEMPERATURE CURVE

3.7.5.7 Fuel Subsystem

3.7.5.7.1 Description and Components. The aircraft fuel subsystem shall include the following:

a. The entire fuel system, including extended range kit and ESSS fuel system, shall incorporate design features which resist flammable fluid spillage or ignition during survivable crash impacts in order to reduce or eliminate the potential for postcrash fire. The crashworthy fuel system shall include the following design features.

1. Smooth shaped crashworthy tanks with no sharp protuberances.
2. Frangible support bolts and filler necks, between tank and aircraft structure.
3. Minimum tank fittings.
4. Self–sealing breakaway valves, which will separate and seal each half during excessive crash loads, at fuel tank to fuel line, and tank–to–tank interconnects.
5. Self–sealing breakaway valves, installed at the fuel tank, shall not have more than 1/2 inch protrusion after separation.
6. One opening located in the top surface, housing the main fuel outlet valve, vent outlet valve, and the fuel gaging electrical feedthrough.
7. Filler cap and closed circuit/pressure refueling receptacle, tank wall mounted.
8. Tanks located away from electrical compartments and landing gear, except for the extended range kit.
9. Each fuel tank vent system shall incorporate a non–spill vent valve, normally closed, allowing inward and outward venting.
10. The crashworthy fuel system line routing design features shall incorporate the following:.

    (a) Cut resistant flexible hose, except for the Fuel Booster Pump Discharge Line.
    (b) Frangible fuel line supports.
    (c) Self–sealing breakaway valves at all hose connections, from the fuel tank up to and including the firewall.
    (d) Crashworthy fuel gaging probes which crush and/or deform during excessive crash loads without causing fuel cell rupture.

b. Fuel cells – Refer to 3.7.5.7.3 herein.

c. The fuel subsystem shall be suitable for use with grades JP–4 and JP–5 fuels.

d. The fuel subsystem shall include closed–circuit refueling. (See 3.7.5.7.10 herein.)

3.7.5.7.1 (Cont'd)

e. The fuel system shall be capable of singlepoint, pressure fueling and defueling and gravity fueling and defueling. When using pressure fueling, the minimum rate shall be 300 gallons per minute (gpm) when all tanks are fueled simultaneously or 125 gpm when multiple tanks are fueled separately. (See 3.7.5.7.10 and 3.7.5.7.11 herein.)

f. Gravity refueling and defueling provisions shall be included. (See 3.7.5.7.11 herein.)

g. Refueling operations shall be capable of being accomplished with engine(s) operating. (See 3.7.5.7.10 herein.)

h. The fuel subsystem shall be capable of providing available fuel to either engine from any cell.

i. An aerial refueling subsystem shall not be provided.

j. A fuel jettison subsystem shall not be provided except as required by 3.7.5.7.3.3 herein.

k. A 20 minute fuel reserve (flight at maximum range airspeed at design gross weight less fuel expended at sea level standard) shall be protected against 14.5mm projectiles. (See 3.7.5.7.3 herein.)

l. Protection of fuel lines against 12.7 mm (AP) projectiles shall be provided in accordance with SS–30 (except for the Fuel Booster Pump discharge line).

m. Void filler foam shall be applied to all voids around tanks containing flammable fluids. Voids of less than three inches in depth shall be completely filled, and a minimum of three inches of void filler shall be applied to voids greater than three inches in depth. The space provided for the void filler foam may be utilized for the installation of rigid foam.

n. The subsystem shall be capable of manual draining from the sump and have fittings compatible with ground fuel sampling, and defueling equipment. An alternate method of fuel sampling shall be provided through the gravity fill port.

o. Suction fuel transfer from tanks to engines shall be provided by engine mounted fuel pumps furnished by the engine manufacturer. The aircraft fuel subsystem shall provide the capability for priming as required by paragraph 3.7.3.3.4.1 of Model Specification E1290. The aircraft shall be capable of operation to service ceiling with JP–4 or JP–5 at fuel temperatures to 135°F; however, with JP–4 the fuel boost pumps shall be operating.

p. A fuel precheck system shall not be provided.

The fuel subsystem for each engine shall include fuel tanks, piping, fittings, valves, a strainer, a fuel quantity gaging system, a low fuel level warning system, a feed system, a defueling system, gravity refueling, ground pressure refueling, and closed circuit refueling. The fuel subsystem shall not limit engine operation under any normal flight condition. The fuel subsystem shall not be a center of gravity control device. The fuel feed subsystem shall be independent of the electrical subsystem and any other subsystem of the aircraft. Each feed subsystem shall include one manually controlled valve to shut off fuel flow to the engine. Fuel tank design shall permit complete interchangeability between lefthand or righthand installations. It shall not be possible to fill any one tank or conversely avoid filling any one tank with the pressure refueling system.

3.7.5.7.2 Fuel Pumps. Fuel pumps for fuel system prime and APU boost shall be in accordance with Sikorsky Engineering Specification SES–701110.

3.7.5.7.2.1 Fuel System Booster Pumps. The tank mounted fuel Booster Pumps shall be as shown on SCD S6130–63015.

3.7.5.7.3 Fuel Tanks. The fuel tanks shall be constructed of self–sealing crash resistant material. The tanks shall be completely self–sealing against any 12.7mm projectiles. The 20 minute reserve fuel area shall be protected against 14.5 mm projectiles. The tanks shall be capable of being dropped from a height of 65 feet while filled to normal capacity with all air removed and exhibit no subsequent leakage.

3.7.5.7.3.1 Fuel Tank Capacity. The total usable fuel capacity shall not be less than 359.7 gallons (nominally 2338 pounds for JP–4 or 2446 pounds for JP–5). The fuel shall be equally distributed between the two (2) tanks.

3.7.5.7.3.2 Fuel Tank Installation. Fuel tank support structure shall be separate from landing gear structure. Provision shall be made for removal and installation of each tank without disturbing any major component of the structure and without the use of peculiar GSE.

3.7.5.7.3.3 DELETED.

3.7.5.7.3.4 Fuel Tanks (ESSS). Complete provisions as defined in paragraph 3.2.2.4.1.11.1 and 3.7.16.3 herein, shall be made for the installation of an externally mounted fuel tank system as defined by SES–700006 (see paragraph 2.2.2).

3.7.5.7.4 Vent Subsystem. A fuel tank vent subsystem shall be provided. Vent lines shall be sized to prevent tank over–pressurization in the event of refueling system shut–off valve malfunction during maximum single tank refueling rate.

3.7.5.7.5 Piping and Fittings. Piping and fittings shall be provided. Nonmetallic lines and fittings may be used.

3.7.5.7.6 Valves. A manually operated emergency fuel shut–off valve shall be provided for each engine.

3.7.5.7.7 Strainers and Filters. Fuel filters shall be integral and furnished with the engine. An engine furnished fuel filter installation with bypass valves shall be located between the engine fuel boost pump and the fuel control of each engine.

3.7.5.7.8 Fuel Quantity Gaging. A capacitance-type transistorized fuel quantity gage system shall be installed and include a separate indicator on the instrument panel for each main tank and a continuous readout of total fuel quantity in the main fuel tanks. The indicators shall register the quantity of fuel in pounds for both JP-4 and JP-5 fuel. The gaging system shall be calibrated to indicate zero fuel at the zero usable fuel level.

A low fuel level warning system entirely independent of the gaging system shall be provided. It shall include separate warning lights for each tank in the cockpit to advise the pilot when the fuel quantity is at a reserve of approximately 20 minutes at normal cruise.

3.7.5.7.9 Drainage Provisions. Drains shall be provided. The fuel system shall be capable of manual draining from the sump and shall have fittings compatible with ground fuel sampling and defueling equipment. Overboard drains shall be provided for each engine compartment.

3.7.5.7.10 Refueling Provisions. Closed circuit refueling, single-point pressure refueling and gravity refueling shall be provided. When using pressure refueling, the minimum rate shall be 300 gallons-per-minute (GPM) when both tanks are fueled simultaneously or 125 GPM when both tanks are fueled separately. Refueling operations shall be capable of being accomplished with the engines operating.

3.7.5.7.11 Defueling Provisions. Suction-type defueling shall be provided utilizing the pressure refueling provisions. Gravity defueling shall be provided.

3.7.5.8 Starting Subsystem

3.7.5.8.1 Description. A pneumatic starting subsystem shall be provided. The starting subsystem shall be capable of starting the engines within the engine starting times specified in the engine manufacturer's specification (see 3.7.5.2 herein) and the following:

a. Two starts in a 10 minute period at sea level to 6000 feet pressure altitude and at an ambient temperature of −25°F after being stored at an ambient temperature of −25°F for 72 hours.

b. On the ground (sea level to 6000 feet pressure altitude) at an ambient temperature 22°F warmer than the hot atmosphere temperatures specified in Table III of MIL−STD−210 after being stored at an ambient temperature of 22°F warmer than the hot atmosphere temperatures specified in Table III of MIL−STD−210 for 72 hours.

c. During flight, provided the ambient temperature is not colder than −65°F nor more than 22°F warmer than the hot atmosphere air temperatures specified in Table III of MIL−STD−210 from sea level up to 18,000 feet pressure altitude.

These requirements shall be met using only the onboard starter power source without the addition of kits and the aircraft is serviced with fuel conforming to MIL−T−5624, grade JP−4/JP−5, and oil conforming to MIL−L−23699. Operation at ambient temperatures below −25°F requires installation of an optional winterization kit.

With an optional winterization kit installed (see 3.7.16.2), the starting subsystem shall have a capability of starting the engines at an ambient temperature of −65°F after storage for 48 hours at −25°F and 24 hours at −65°F.

3.7.5.8.2 Starter Installation. The starting subsystem installation shall have the necessary ducting, wiring, and quick disconnect fitting to facilitate external starting. The starter subsystem shall meet engine starting requirements as specified in the engine specification.

3.7.5.8.3 Pneumatic Starters. Two pneumatic starters shall be provided. Start control valves shall be provided. The starters shall be powered by bleed air supplied by the auxiliary power unit (APU). Automatic starter cutout is provided by a remotely mounted cutout switch. Each engine when operating, shall have the capability of supplying bleed air to the other engine starting subsystem. A means shall be provided for manual cutout of the starter motor, and for extended operation for motoring/increased starter assist. The APU start and engine start controls shall be located in the cockpit accessible to the pilot.

3.7.5.9 Engine Nacelle Group

3.7.5.9.1 Description and Components. The engine nacelle group shall include the nacelle structure, engine mounts, firewalls, cowling, and integral work platforms as described herein.

3.7.5.9.2 Nacelle Group Construction. The basic nacelle structure shall be honeycomb fiberglass material. Flammable structural materials shall not be used inside the engine compartments. Washers or engine mounting parts that absorb or are adversely affected by fuel, lubrication oil, or cleaning material shall not be used in the engine compartments.

3.7.5.9.3 Engine Mount. Forward and rear engine mounts shall be provided for each engine. The rear mount shall attach to the inboard and outboard rear mounting flange on the engine and shall react vertical, torsional, and lateral loads. The rear mount shall include a redundant mount, normally not loaded, to react loads in the event of failure of the primary aft mount. The front mount shall react axial, vertical, and lateral loads.

Strength of the engine mounting system shall be in accordance with 3.2.2.4.1.3 herein. Engine mounts shall be detachable and accessible. Engine mounts shall offer no interference to installation and removal of the engine and to removal and replacement of engine and accessories as a unit.

3.7.5.9.4 Firewalls. The engine nacelles shall be separated from surrounding areas of the airframe by firewalls. The firewalls shall be located between the engine and main transmission, engine and top of main cabin, and engine and airframe area inboard of engine and exhaust module and airframe area inboard of exhaust module. The firewalls shall be fireproof. Necessary openings shall be sealed with closefitting fireproof grommets, bushings, fittings or sealing compound. Firewalls shall withstand all survivable crash impacts without losing their sealing ability.

3.7.5.9.5 Cowling. The engine nacelle shall be enclosed by cowling which shall provide access to the engine by removal and in certain areas by hinging outward. The service platform provided for each engine nacelle shall be an integral part of the cowling. The cowlings shall be interchangeable left and right hand. Each service platform shall accommodate two 200 lb men at 1.5g on any critical area without yielding. Vents and joints in cowling shall be located out of the path of the exhaust gases. The cowling shall not interfere with any parts of the engine, its accessories, or its installation. The cowling design shall incorporate the following features to provide positive locking cowling sections so that vibrations and/or deflections shall not cause cowl opening during flight or lose overboard:

(1) The actuating handle linkage shall be over centering with a secondary latch to hold the handle in the closed position.

(2) The cowl latching pins shall have a one (1) inch engagement.

(3) The locking direction of the latching pins shall be fore and aft in relation to the aircraft.

(4) Locking points shall react applied loads in shear.

(5) Rubber bumpers shall be mounted to the firewall, in close proximity to the latching mechanism such that the locking pins shall always be in a preloaded condition.

(6) Loads in the locked position shall be carried by the locking pins. Specifically the actuating linkage is not loaded after engagement.

3.7.5.9.6 Drains. All drains in the engine nacelle area shall be free of traps and configured to prevent accumulation of vapor or fluid. All drains shall discharge clear of the aircraft structure and shall be clearly identified by markings. Pressure differentials on all drains shall be controlled to prevent adverse effects on engine performance. Overboard drains for each engine compartment shall be provided which are capable of draining fuel at a rate equal to or greater than the maximum fuel flow rate which could result from a severed fuel line.

3.7.5.9.7 Fire Warning Subsystem. An optical surveillance fire warning subsystem shall be provided in each engine nacelle and the APU compartment. Each engine nacelle contains two (2) optical sensors, the APU compartment contains one (1) optical sensor. A fire detector subsystem shall not be provided in the tailpipe sections.

3.7.5.9.8 Fire Extinguishing Subsystem. A two (2) shot capa bility high rate discharge type fixed fire extinguishing subsystem shall be provided for each engine nacelle and the APU firewall compartment. The subsystem shall contain the (2) 86 in.^{3} dual outlet containers, each is equipped with 2.5 lbs of bromotrifluoromethane (CF_3BR), two (2) firing squibs, one (1) overboard thermal discharge safety port, one (1) 0–1500 psi pressure gage, and supercharged with gaseous nitrogen. Both containers are interconnected with two (2) two way check valves, tees, and each line independently routed to the left and right hand engine compartments. A directional control valve shall be installed in the left hand engine extinguishing line, and when energized, directs agent to the APU compartment. Actuation of either engine or APU fire extinguishing T–handles shall arm the containers and subsequent firing is accomplished by actuation of the fire extinguishing switch to the main position, and if required, to the reserve position for a second discharge. The subsystem for each engine nacelle shall be automatically activated by an omni–directional "g" sensitive switch, mounted on the aircraft in the event of a crash which exceeds 14.5 g for a duration of at least 12 milliseconds. A fire extinguishing agent discharge indicator shall be provided on the side of the aircraft to facilitate inspection. Fire extinguishing protection during engine starting shall be provided by portable ground fire extinguishers (GSB). Push–in doors for introduction of fire extinguishing agents shall not be provided in the engine cowling. Introduction of the extinguishing agents into the engine compartments shall be accomplished via the engine cowling cooling scoops. A fire extinguishing subsystem shall not be provided for the tailpipe sections.

3.7.5.9.9 Engine Water Wash. Provisions shall be incorporated in the engine installation for engine water wash. A short length of hose shall be coupled to the engine water wash fitting and attached to the aircraft as a fixed provision. The hose shall be accessible with the cowling in the open or closed position. The hose end fitting shall be Aeroquip part number AE8O711G (or equivalent).

3.7.5.10 Drive Subsystem

3.7.5.10.1 Description and Components. The drive subsystems shall include a modular main rotor transmission interconnecting the two engines to the main rotor. In addition, it shall have an intermediate transmission at the tail pylon base, a tail rotor transmission at the tail rotor, and the shafting necessary to connect these units. Cooling and lubrication subsystem and a main rotor speed sensor shall be provided. The shafting static torque strength shall meet the requirements of the engine specification and 3.2.2.4.1.3 herein. Damaging gear resonant frequencies shall not occur within a minimum of 30% from design continuous operating speed. The minimum B–10 life of the drive system bearings shall be 3600 hours for the load conditions established by the speed and maneuver spectra of 3.2.11. All gears shall be designed for unlimited life both in bending and compressive stresses at the maximum continuous power to be transmitted. The drive subsystem components shall operate at the power required for flight at the speed for maximum range at sea level standard conditions for not less than 30 minutes after total loss of the lubrication system. The drive subsystem shall be as further described herein.

3.7.5.10.2 Main Transmission. The aircraft main transmission shall consist of five separate modules designed to be replaced in the field. The modules are: a main housing module, two engine input modules, and two accessory modules. The common modules shall be interchangeable. A constant monitoring, fuzz suppression, chip detection system shall be provided in the oil return oil lines of the main housing module, and each input and accessory module. The fuzz burnoff feature of the chip detection system shall not function when the oil temperature exceeds 285°F. The chip detection system shall actuate a light in the cockpit when chips are present in the system. Each chip detector shall incorporate a sealing valve permitting removal of the detector for visual inspection without loss of oil. Each chip detector shall be capable of performing a self–test for continuity of the chip detector circuit whenever power is applied to the circuit. Additional main transmission sensors shall indicate oil system pressure, low oil pressure, oil–out temperature, and high oil temperature. Accessibility to the oil pumps, filters, main and input module chip detectors and strainers shall be provided through an access panel in the cabin. The continuous rating of the main transmission shall be 3400 horsepower. The single engine rating of the main transmission shall be 1900 horsepower. The design life of the transmission shall be based on this rating with 10 percent of the operating time utilizing single engine input at intermediate power for sea level, standard conditions. The input shaft from the engine and first reduction stage shall be designed for 10 percent operating time at the intermediate power at sea level standard day conditions, and the remaining 90 percent time at one–half the transmission total input rating including requirements for accessory drives.

Note: For performance calculations the transmission rating shall be limited to 2828 hp (100% indicated torque) for aircraft airspeeds of 80 kts or more and to 3400 hp (120% indicated torque) below 80 kts.

3.7.5.10.2.1 Main Transmission Lubrication. The oil lubrication system of the main transmission shall incorporate a dual primary lube pump system. The lube pumps shall deliver cooled and filtered oil through internally cored passages to all bearings and gear meshes. The dual primary lube system shall supply sufficient lubrication to enable operation at cruise power levels for a minimum of 60 minutes after loss of one of the primary lube pumps. The main transmission shall use oil conforming to and having any of the variations of the characteristics permitted by MIL-L-23699, MIL-L-7808 or DOD-L-85734. The lubricant shall not be completely depleted in the event of a rotating shaft seal failure. No external leakage from the main transmission onto the aircraft structure shall be permitted. The static seals shall not permit leakage. In those cases where a small amount of oil seepage is possible, provisions shall be made for collection to overboard drains. The oil filtration subsystem shall be equipped with a 3 micron primary filter and shall have an automatic emergency impending bypass capability protected by a 75 micron secondary filter. An indicator shall not be provided for the secondary filter bypass.

3.7.5.10.2.2 Main Transmission Cooling. The main transmission cooling system shall consist of an externally mounted oil cooler and blower assembly. The blower shall be driven directly from the tail rotor driveshaft. Oil lines shall connect the main transmission to the oil cooler. The cooling system shall be removed or installed as a single unit. The cooling system shall cool the main transmission oil from the normal operating output temperature of 230°F to 176°F, with standard day ambient temperatures. The oil cooler shall be protected by a filtration system located in the main transmission.

3.7.5.10.3 Shafting. The tail rotor driveshaft shall be designed to transmit the maximum transient power from the main transmission to the tail rotor. Driveshaft realignment shall not be required after initial installation.

3.7.5.10.4 Intermediate Gearbox. The aircraft intermediate gearbox shall transmit power from the tail driveshaft to the tail gearbox. The intermediate gearbox shall incorporate an oil, splash type, lubrication system using oil conforming to and having any of the variations in characteristics permitted by MIL-L-23699, MIL-L-7808 or DOD-L-85734. A constant monitoring, fuzz suppression, chip detection system and an oil temperature sensor shall be provided and shall actuate lights in the cockpit in the event of a chip being detected or high oil temperature. The fuzz burnoff feature of the chip detection system shall not function when the oil temperature exceeds 285°F. Each chip detector shall be capable of performing a self-test for continuity of the chip detector circuit whenever power is applied to the circuit. The chip detector shall incorporate a sealing valve permitting removal of the detector visual inspection without loss of oil. The intermediate gearbox rating shall be as specified in 3.7.5.10.5.

3.7.5.10.5 Tail Gearbox. The tail gearbox output shaft shall be canted 20 degrees and shall support and drive the tail rotor. The tail rotor pitch control shaft shall be supported within the tail gearbox output shaft. The tail gearbox shall incorporate an oil, splash type, lubrication system using oil conforming to and having any of the variations in characteristics permitted by MIL-L-23699, MIL-L-7808 or DOD-L-85734. A constant monitoring, fuzz suppression, chip detection system and an oil temperature sensor shall be provided and shall actuate lights in the cockpit in the event of a chip being detected or high oil temperature. The fuzz burnoff feature of the chip detection system shall not function when the oil temperature exceeds 285°F. Each chip detector shall be capable of performing a self-test for continuity of the chip detector circuit whenever power is applied to the circuit. The chip detector shall incorporate a sealing valve permitting removal of the detector for visual inspection without loss of oil. The tail rotor drive train shall have a continuous rating of 424 hp and a transient rating of 765 hp.

3.7.5.10.6 Not used.

3.7.5.10.7 Overrunning Clutches. During autorotation and single engine operation, the engines not supplying torque shall be immediately and automatically decoupled from the drive subsystem by overrunning clutches to permit continued operation of the main rotor, tail rotor, and accessory drive. The bearings and lubrication subsystem for the clutch shall be such that a two hour period of full overrunning shall be permissible without any impairment, and complete loss of the transmission lubrication subsystem shall not prevent overrunning for 30 minutes.

3.7.5.10.8 Drive Subsystem Accessories. A rotor speed sensor, connected to an instrument in the cockpit, shall be provided on the main transmission. An electrical generator and hydraulic power pack shall be mounted on each main transmission accessory module and shall be rotor driven during single engine operation or autorotation.

3.7.5.11 Auxiliary Power Unit (APU)

3.7.5.11.1 Description and Components. The government furnished auxiliary power unit (APU) shall be a Turbomach T-62T-40-1 or a Garrett GTC P36-150 (BH) gas turbine power unit. The subsystem shall include accessories, controls, starting system, cooling system, lubrication system and fuel control system. The APU shall provide pneumatic power for starting the main engines on the ground and for cabin heating on the ground; the APU mounted generator provides the capability of supplying electrical power which is used for ground electrical supply and for emergency in-flight electrical supply and to power the electrical motor driven No. 3 hydraulic system for ground hydraulic checkout. In addition, the APU generator shall provide electrical power to the blade de-ice system in the event of a malfunction of one of the main power sources (see 3.7.9.2.1.2), and the APU generator shall be capable of supplying power to checkout (test) the blade de-ice system, except for the EOT (element on time) test.

3.7.5.11.2 APU Installation. The APU shall be airframe mounted to the rear and above the troop/cargo compartment. The APU fuel control shall be enclosed to provide leak containment and the APU hot section shall be firewalled. The APU compartment shall not be lined with fireproof material.

3.7.5.11.3 APU Starting. The APU start system, powered by a hydraulic accumulator, shall provide starting self-sufficiency for the aircraft to -25°F. Space and hydraulic reservoir volume capacity shall be provided for installation of a second accumulator as part of an optional special equipment winterization kit (see 3.7.16.2 herein) for use in extending the start capability to -65°F. See Figure 36 for APU starting envelope.

A hand pump mounted in the cabin shall provide hydraulic recharge capability for the accumulator. The accumulator shall be automatically recharged in flight when the accumulator pressure falls below limits required for APU start.

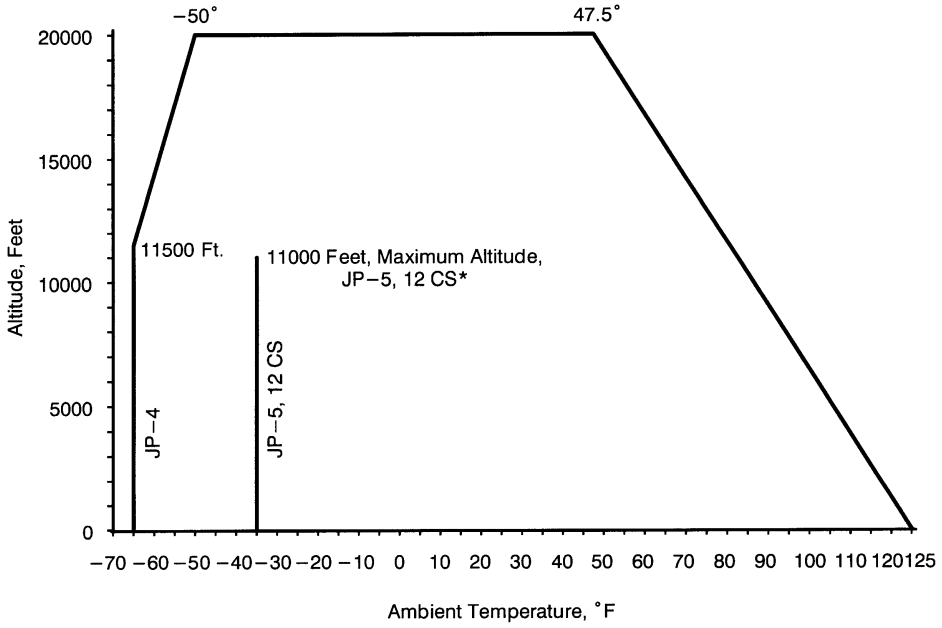

*JP−5 limits not required for Garret APU.

FIGURE 36. APU STARTING ENVELOPE

3.7.5.11.4 APU Controls/Indicators. The APU control and indicators shall consist of a start control, warning indicators to indicate APU fail and high oil temperature, and diagnostic indicators mounted on the government furnished APU Electronic Sequence Unit (ESU) installation in the cabin overhead. The indicators signify automatic shutdown due to low oil pressure, overtemperature, overspeed, underspeed, open thermocouple, and control printed circuit board failures and provide additional diagnostic and sequencing information.

3.7.5.11.5 APU Components. The APU characteristics shall include:

a. The APU shall operate throughout its operating envelope with fuel conforming to and having any of the variations in characteristics permitted by MIL-T-5624 of grades JP-4 and JP-5, except that operation shall not be required using fuel having a kinematic viscosity greater than 12 centi stokes.

b. The APU shall function when using fuel contaminated to the extent specified in Table I of DARCOM-CP-2222-02000 for at least 30 hours at maximum continuous rated power without the fuel filter being cleaned or replaced.

c. The APU shall function throughout its operating envelope when using oil conforming to and having any of the variations in characteristics permitted by MIL-L-7808 or MIL-L-23699 except that operation shall not be required using oil having a kinematic viscosity greater than 13,000 centi stokes.

d. The APU shall make consistent successful engine starts from sea level to a minimum of 20,000 feet pressure altitude within the times shown on Figure 17 of DARCOM-CP-2222-02000. For APU starting envelope, see 3.7.5.11.3.

e. An hourmeter/start counter shall be installed.

3.7.5.12 Propulsion Subsystem Controls

3.7.5.12.1 Control Design. No single failure or malfunction in any propulsion control shall cause the failure of any subsystem. Each control shall withstand operating loads without failure.

3.7.5.12.2 Engine Controls. An engine power control lever shall be provided for each engine. The power control lever shall have four discrete positions: "OFF", "IDLE" "FLY" and "LOCKOUT", which shall correspond to the "shutoff", "ground idle", "max", and "DECU lockout/manual override" power lever spindle positions on the engine. The power control shall permit the engine power lever spindle to be set at all positions between "ground idle" ("IDLE") and "max" ("FLY") (3.7.5.12.2.1). The power management shall automatically maintain rotor speed (rpm) and provide automatic engine load (torque) equalization. Manual override (pilot and copilot controls) shall be provided to permit individual engine control by selecting the "lockout" position for the power levers. Engine power turbine speed trim capability shall be provided through collective mounted switches (beepers).

3.7.5.12.2.1 Engine Shutdown Stop. The engine quadrant control levers shall require a separate and distinct operation to place the control in the "shutoff" position from "ground idle".

3.7.5.12.3 Starter Controls. A starter button shall be provided on each engine power control lever. The starter control operation shall provide the following capabilities:

a. Automatic start sequencing with capabilities of aborting the start sequence or providing starter assist beyond normal cutout speed.

b. Motoring sequencing for engine cooldown and water washing.

3.7.5.12.4 APU Controls. See 3.7.5.11.4 herein.

3.7.5.12.5 Cooling Air Controls. Controls shall not be required.

3.7.5.12.6 Fuel Subsystem Controls. The following controls shall be provided for the fuel subsystem:

a. Engine firewall fuel shut–off selector valves (2 per a/c) consisting of: "OFF POSITION", "DIRECT POSITION" and "CROSSFEED POSITION"

b. System prime selection

c. APU boost pump and valve selection

d. Range extension system activation

e. ESSS fuel system control (when removable portion of ESSS kit is installed. (see 3.2.2.4.1.11.1)).

3.7.6 Flight Control Systems

3.7.6.1 Primary Flight Control System. The primary control system shall consist of the lateral control subsystem, the directional control subsystem, the longitudinal control subsystem and the collective pitch control subsystem. Transfer of inputs from the cockpit to the control surfaces shall be by mechanical means. Pilot assist functions shall be hydro–mechanical boost, stability augmentation (SAS), and trim.

3.7.6.1.1 Flight Control Stations. Flight controls shall be provided for pilot and copilot and shall consist of the cyclic pitch control, collective pitch control (to the left of the pilots), and directional trim (rudder) control. The flight control subsystem shall be designed to accommodate the 5th–to–95th percentile Army aviator. Movement of the flight controls shall not be restricted by installation of additional features such as armored seats or instrumentation. Pedal design and surrounding structure shall minimize the possibility of trapping the occupants feet during a crash. Distance between pedals and structure, below and to the sides of pedals shall be less than 2 in. or greater than 6 in.

3.7.6.1.2 Mechanical Control System. Mechanical helicopter stick and pedal type controls, including a collective pitch control lever, shall be provided. A longitudinal and lateral cyclic stick and rudder pedal force gradient with trimming means shall be provided. Accessible positive stops shall be provided in the control sy stem to prevent movement of controls bey ond design lim its. Dual controls shall be provided and shall consist of the cyclic control stick for controlling lateral and longitudinal flight, collective pitch control lever for controlling ascent and descent, and rudder pedals for directional control. The pilot's collective pitch stick only shall be equipped with a locking device and an adjustable friction device. A means shall be provided to collapse the copilot's collective stick to a retracted position to facilitate ingress and egress to and from the copilot's station. Rudder pedals shall be adjustable in flight. A single control at each station shall be provided to adjust both pedals at that station simultaneously.

3.7.6.1.3 Hydraulic Control System. (See 3.7.8.1.1 through 3.7.8.1.3 herein).

3.7.6.2 Automatic Stabilization Equipment. The automatic stabilization equipment shall be comprised of the stabilator, stability augmentation, and flight path stabilization subsystems. These subsystems shall be capable of being engaged or disengaged from the flight control panel at any time during flight without disturbance. The automatic stabilization equipment shall provide the following functions:

a. Pitch, roll, and yaw stability augmentation

b. Pitch and roll attitude hold

c. Heading hold

d. Airspeed hold in forward flight

e. Coordinated turns in forwa rd flight

Except for the analog stability augmentation system, notice shall be given to the pilot/copilot of malfunctions of all electronic or electromechanical pilot assist functions and malfunctions of such augmentation functions sha ll result in that function be ing switched off.

3.7.6.2.1 Stability Augmentation System (SAS). A SAS shall be provided for the aircraft and shall enhance the stability of the aircraft in the pitch, roll and yaw axes. The SAS shall be operational in all aircraft speed regimes. Engagement and disengagement may be accomplished at any time.

3.7.6.2.2 Flight Path Stabilization. A Flight Path Stabilization System (FPS) shall provide pitch and roll attitude hold and a irspeed hold functions. Heading hold shall be provided in the yaw axis as well as automatic turn coordination at airspeeds over 60 knots.

The authority of the pitch trim servo, roll trim actuator, and yaw trim actuator shall be 100 percent of control authority and their maximum rate of control input in response to electrical commands shall not exceed 10 percent of control authority per second.

3.7.6.2.3 Stabilator System. An electronically controlled variable angle of incidence stabilator shall be provided for the aircraft and shall enhance the handling qualities of the aircraft with respect to longitudinal static and dynamic stability, and reduced collective to pitch aircraft coupling. The stabilator system shall provide automatic operation in all aircraft speed regimes and shall fail safe with manual backup capability. The system shall contain dual components to achieve fail safe characteristics and during automatic operation shall continuously monitor itself for proper operation.

Engagement of the stabilator system in the automatic mode shall be accomplished by a pushbutton switch on the flight control panel. Operation of the manual slew switch, located on the flight control panel, shall cause the system to revert to the manual mode and move the stabilator in response to the manual slew command. Stabilator slew up switches are provided on the pilot and copilot cyclic sticks for the purpose of giving the pilots a capability of a finger tip activated stabilator slew up command without having to remove their hands from the cyclic control. The stabilator cyclic slew switches command the stabilator to move in the trailing edge up direction only. The position of the stabilator shall be displayed on the pilot and copilot stabilator position indicators.

3.7.6.3 Control Trim Function. A cyclic trim function shall be provided to maintain the cyclic stick at a desired position. This positioning system shall be overridden by moving the cyclic stick against a spring force. The neutral force position may be adjusted by the pilot or copilot trim controls. The trim controls shall also neutralize steady state stick forces in forward flight. Cyclic trim shall be engaged from the flight control panel. The system shall permit trimming of the aircraft when under automatic control in order to establish the desired steady state flight conditions.

3.7.6.4 Pedal Trim. Pedal trim is provided with trim engaged to maintain pedals in a desired position. Pedal trim release shall be controlled by pedal switches at all airspeeds, except that these switches shall be disabled at airspeeds greater than 60 knots with flight path stabilization engaged and the cyclic trim controls not depressed. A pedal damper shall be provided at all times to smooth pedal inputs.

3.7.7 Instrument and Navigational Equipment

3.7.7.1 Instruments. The aircraft shall be capable of instrument approaches to terminal areas when such terminal areas are equipped with precision and non–precision landing aids compatible with the avionic configuration of the aircraft. The instruments listed on the following pages shall be provided by the Contractor except where indicated as Government Furnished Property (GFP):

Consolidating of instruments and backup systems shall be as follows:

a. The GFP pilot's altimeter and copilot's altimeter shall be installed and tested in accordance with contractor established procedures.

b. Integrated horizontal and vertical situation indicators (HSI and VSI) shall be provided for both the pilot and copilot.

c. The VSI shall provide the following: Attitude (pitch and roll), rate of turn, inclinometer (slip and skid), course deviation (VOR, LOC, LDNS), FM Homing and station passage, glide slope, pitch and roll trim and weak signal flag alarms, pitch command bar, roll command bar, collective command pointer, CIS fail flag, decision height light, marker beacon light and go–around advisory light. The attitude and turn rate indicator shall be so connected as to provide redundancy in the event of power or single gyro failure.

d. The HSI shall provide the following:

   Two navigation bearing pointers, heading (magnetic), digital course readout, course deviation, digital readout of distance to destination, TO–FROM indicator, and weak signal flag alarms.

e. Two turn rate gyroscopes for use with the turn rate needle on both pilot and copilot VSI shall be provided.

f. The government furnished Absolute Altimeters shall be installed.

g. Reliability values are per unit MTBF's using failures and operating time definitions of 3.2.3.

h. A panel mounted switch shall be provided to manually energize the fast erect circuits of the remote attitude gyros.

INSTRUMENT LISTING

QTY	NOMENCLATURE	SIZE (INCHES)	RANGE	RELIABILITY (MTBF)	INACCURACY (NOT TO EXCEED)
2	Vertical Situation Indicator	5.25 x 5.0		4000 Hours	
2	Horizontal Situation Indicator	4.25 x 5.0		4000 Hours	
2	Airspeed Indicator	3.25 x 3.25	20 to 250 kts	5000 Hours	Requirements of MIL–I–5721
2	Instantaneous Vertical Velocity Indicator	3.25 x 3.25	±6000 ft/min	2857 Hours	Requirements of MIL–I–58067
1	Magnetic Compass with Calibration Card	2.0 x 2.0	360°	2000 Hours	Requirements of MIL–C–5604
2	Pilot Display Unit consisting of:	6.3 x 3.5			
	Dual Torquemeter Indicator (VS) (Analog Scale–Digital Scale)		0 – 150%	6000 Hours	1% of output at intermediate power
(*)	Triple Tachometer Main Rotor (VS)				
	(Power Turbines (N_p) & Main Rotor (N_R))		0 – 130% RPM	5000 Hours	0.5% rated output shaft speed (N_P) 0.5% of normal operating speed (N_R)
1	Central Display Unit consisting of:	5.4 x 8.8			
	Dual Gas Generator Tachometer (N_G)		0 – 110% RPM	4800 Hours	0.5% of maximum continuous speed
	Tachometer (N_G) with Digital Readouts (VS)				

(*) Normal operating range of rotor and engines shall be indicated by green color.
As RPM increases above 101 percent, the color shall change to amber to indicate caution range.
If rotor RPM increases beyond 110 percent, rotor RPM code color shall change from amber to red.

In addition, three (3) separate rotor overspeed lights shall be actuated and remain on if rotor RPM exceeds 127 percent, 137 percent and 142 percent.

INSTRUMENT LISTING (Cont'd)

QTY	NOMENCLATURE	SIZE (INCHES)	RANGE	RELIABILITY (MTBF)	INACCURACY (NOT TO EXCEED)
	Dual Power Turbine Gas Temperature Indicator (TGT) with Digital Readouts (VS)		0 − 950°C	4800 Hours	5°C Analog 5°C Digital above 400°C
	Dual Fuel Quantity Indicator with Digital Total Fuel Readout (VS)		Analog 0−1500 lb Digital 0−3000 lb	6000 Hours	0.60% Full Scale 0.25% Full Scale
	Dual Engine Oil Pressure Indicator (VS)		12 − 170 psi	7000 Hours	5% of normal operating pressure
	Dual Engine Oil Temperature Indicator (VS)		−50 to +180°C	7000 Hours	3°C
	Main Transmission Oil Pressure Indicator (VS)		0 − 190 psi	7000 Hours	5.0% of normal operating pressure
	Main Transmission Oil Temperature Indicator		−50 to 170°C	5000 Hours	3°C
2	Outside Air Temperature Indicator	2 (Round)	−70°C to +50°C	2500 Hours	±1.5°C
2	Stabilator Angle Indicator	1.75 x 2.375	−45° to +10°	5200 Hours	
2	VSI/HSI Mode Selector	3.25 x 3.25		2700 Hours	
1	CIS Mode Selector	1.25 x 3.25			
1	Barometric Altimeter AAU−32/A (With Altitude Encoder Capability) (GFP)	3.25 x 3.25	−1000 to +38000 ft	1000 Hours	Requirements of MIL−A−81852
1	Barometric Altimeter AAU−31/A (GFP)	3.25 x 3.25	−1000 to 38000 ft	1000 Hours	Requirements of MIL−A−81851
2	Clock (Digital) (GFP)	2.38 x 2.38	24 hours		Requirements of PDMME−367−3

3.7.7.2 Instrument Panel. The plane of the instrument panel shall be placed within 28 to 30 inches from the design eye position. All instruments shall be removable from the front of the panel.

3.7.7.2.1 Instrument Glare Shield. A non–reflecting instrument glare shield shall be provided in the cockpit to prevent distracting reflections on the windshield or canopy. Design of the glare shield shall not interfere with pilot or copilot instrument scanning with the seats in the full up, down, forward and back positions.

3.7.7.3 Markings. Instrument scales shall be provided. High–efficiency anti–reflection (HEA) coatings shall be utilized on all instruments. Markings for all aircrew stations and passenger compartment displays shall be provided.

3.7.7.4 Pitot and Static Pressure Subsystem. A dual, heated pitot and static pressure subsystem shall be provided. The pitot probes shall be aerodynamically compensated and the static subsystem shall perform through the entire operating flight envelope of the aircraft. The static subsystem inaccuracy shall be no more than a 50 foot error between the two subsystems. The subsystem shall prevent water or other foreign matter from becoming trapped within.

3.7.7.5 Caution/Warning/Advisory Signals. Caution/warning signals shall be provided.

Advisory indicator lights shall be grouped categorically and located as a group adjacent to the caution lights on the annunciator panel. Dimming of the caution/advisory panel legends and other cockpit annunciators and indicator lights shall be accomplished by actuation of the brt–dim switch located on the caution advisory panel. The system shall be designed such that once dimmed, all caution/advisory panel legends and other cockpit annunciators and indicator lights will automatically return to the bright mode whenever the pilot's primary lighting control is off or electrical aircraft power is shut down. The dim level for the caution/advisory, master warning, and pushbutton switch annunciator legends shall be variable by the pilot. In addition, the caution/advisory/master warning panel shall incorporate a second dim level or "kill" mode to reduce legend brightness to approximately 0.001 ft–Lamberts in the event that the number of illuminated legends becomes too high to maintain NVG compatibility. The caution, warning, and advisory light displays shall include the following signals:

a. Master Warning (2 panels)
   1. Master Caution
   2. Fire
   3. #1 Engine Out
   4. #2 Engine Out
   5. Low Rotor RPM (Flashing 3 to 5 fps)

aa. Fire Warning
   1. #1 Engine
   2. #2 Engine
   3. APU

3.7.7.5 (Cont'd)

b. Cautions

1. #1 Fuel Low (Flashing 4+1 fps)
2. #2 Fuel Low (Flashing 4+1 fps)
3. #1 Fuel Pressure
4. #2 Fuel Pressure
5. #1 Engine Oil Pressure
6. #2 Engine Oil Pressure
7. #1 Engine Oil Temperature
8. #2 Engine Oil Temperature
9. #1 Engine Chip Detector
10. #2 Engine Chip Detector
11. #1 Engine Starter
12. #2 Engine Starter
13. #1 Primary Servo Pressure
14. #2 Primary Servo Pressure
15. IRCM INOP
16. Main Transmission Oil Pressure
17. #1 Generator
18. #2 Generator
19. #1 Converter
20. #2 Converter
21. A.C. Essential Bus Off
22. Battery Low Charge
23. #1 Hydraulic Pump
24. #2 Hydraulic Pump
25. Gust Lock
26. #l Tail Rotor Servo
27. #1 Generator Bearing
28. #2 Generator Bearing
29. Pitch Bias Fail (not connected)
30. Main XMSN Oil Temperature
31. Intermediate Transmission Chip Detector
32. Tail Transmission Chip Detector
33. IFF
34. D.C. Essential Bus Off
35. Battery Fault (not connected)
36. Stabilator
37. Flight Path Stabilization
38. Boost Servo Off
39. Aux Fuel
40. SAS Off
41. Trim Fail
42. APU Fail
43. Main Rotor De–Ice Fail
44. Main Rotor De–Ice Fault

3.7.7.5 (Cont'd)

45. Tail Rotor De–Ice Fail
46. Ice Detected
47. #1 Oil Filter By–passed
48. #2 Oil Filter By–passed
49. #1 Fuel Filter By–passed
50. #2 Fuel Filter By–passed
51. Intermediate XMSN Oil Temperature
52. Tail XMSN Oil Temperature
53. APU High Oil Temperature
54. Chip – Accessory Module LH
55. Chip – Accessory Module RH
56. Chip – Input Module LH
57. Chip – Input Module RH
58. Chip – Main Module Sump
59. Left Pitot Heat
60. Right – Pitot Heat
61. #1 Reservoir Low
62. #2 Reservoir Low
63. Back–up Reservoir Low
64. Tail Rotor Quadrant

c. Advisories

1. #1 Engine Anti–Ice On
2. #2 Engine Anti–Ice On
3. Prime/Boost Fuel Pump On
4. GPS Alert
5. APU On
6. Back Up Pump On
7. Parking Brake On
8. APU Accumulator Low
9. APU Generator On
10. Cargo Hook Open
11. Hook Armed
12. External Power Connected
13. Landing Light On
14. #1 Engine Inlet Anti–Ice On
15. #2 Engine Inlet Anti–Ice On
16. #2 Tail Rotor Servo ON
17. Searchlight ON
18. Spare

3.7.7.6 Aural Warning Signals. Aural warning signals shall be provided for the following:

1. Engine out
2. Low rotor RPM
3. Stabilator Disengaged

3.7.7.7 Advanced Avionics. Space and power provisions shall be provided which shall facilitate the installation and integration at a later date of advanced avionics providing the following capabilities:

a. Terrain avoidance/following.
b. Self–contained remote area landing system.
c. IFR formation flight capability.
d. Automatic dead reckoning steering commands to the navigation displays in event of failure or jamming of the navigation receiver.
e. A landing assist night vision device.

The growth capacity of the electrical system (less kits) under normal operating conditions shall be 35.1 KVA as derived in SER–70653, which may be used for advanced avionics.

3.7.8 Hydraulic and Pneumatic Subsystems

3.7.8.1 Hydraulic Subsystem. Hydraulic flight control and APU start subsystem and components shall be provided.

The subsystems shall be designed for use with MIL−H−5606 and MIL−H−83282 hydraulic fluid. MIL−H−83282 shall be the primary fluid. MIL−H−5606 and MIL−H−83282 hydraulic fluid shall be suitable for subsystem operation at ambient temperatures between −25°F and +125°F without a winterization kit. With the winterization kit specified in 3.7.16.2 installed, MIL−H−5606 fluid shall be suitable to −65°F and MIL−H−83282 fluid shall be suitable to −25°F. The main landing gear brake system, the main and tail landing gear oleo struts, and the main rotor dampers shall be serviced with MIL−H−5606 fluid throughout the entire temperature range. Three hydraulic systems shall be provided. The hydraulic systems shall operate under type II temperature conditions at 3000 psi and shall include pressurized reservoirs with air−oil separation. The hydraulic system shall include a No. 1 primary power operated control system, a No 2 primary power operated control system, and an electrically driven No. 3 hydraulic system for backup. Failure of one primary system shall not adversely affect the functioning of the other primary system. A single failure in another aircraft subsystem shall not incapacitate both primary power operated control systems simultaneously. An integral bleed/relief valve shall be provided at each system reservoir to permit removal of air. The systems shall be designed to preclude air collection other than in the reservoir.

Mechanical power to operate the hydraulic pumps for the two primary power operated control systems shall be provided by the main rotor transmission whenever the main rotor is turning, and this power shall be completely independent of engine operation. The No. 3 hydraulic pump shall be driven by an electric motor which shall be powered by either the No. 1, No. 2 or APU generator.

The No. 3 hydraulic system shall be driven by an electric motor which shall be powered by the APU generator to provide ground checks without operation of the main rotor transmission.

The No. 1 and No. 2 normal servo supply systems shall be completely independent except for electrical interlocks between the flight control servo systems. Normal operation of the primary flight control system shall be with both cylinders of the main servos operating simultaneously. Electrical interlocks shall be provided to prevent simultaneous inadvertent deactivation of both stages of the main rotor power operated system and shall permit deactivation of any one system only if the remaining system is functioning normally. Automatic restoration of an intentionally deactivated system is also provided upon loss of the operating system.

Normal operation of the tail rotor control system shall be with one cylinder of the tail rotor servo operating from the No. 1 system. Automatic electrical interlocks shall be provided to activate the back up No. 3 hydraulic system following malfunction of the No. 1 system pressure.

3.7.8.1.1 No. 1 Hydraulic System. The No. 1 power operated control system shall provide power to operate the No. 1 stage of each of the two stage main rotor primary flight control servos, and the No. 1 stage of the tail rotor servo.

3.7.8.1.2 No. 2 Hydraulic System. The No. 2 power operated control system shall provide power to operate the No. 2 stage of the two stage main primary flight control servos and also power to operate the pilot assist servos.

3.7.8.1.3 No. 3 Hydraulic System. In addition to providing backup power to operate the flight control servos, the No. 3 system shall also power the backup stage of the tail rotor servo and recharge a self–sufficient APU start subsystem. The APU start subsystem shall provide hydraulic starting of the APU at ambient temperatures down to –25°F. For hydraulic starting below –25°F, see 3.7.16.2 herein.

The APU start accumulator shall be hydraulically recharged automatically by the No. 3 electric motor driven pump. A hand pump shall be provided to recharge the APU start accumulator in the absence of electrical power.

3.7.8.1.4 Summary of Actuated Items. The following equipment shall be hydraulically actuated.

Main Rotor Servo Units
Pilot Assist Servo Units
Tail Rotor Servo Unit
Main Wheel Brakes (See 3.7.4.2.1.1 herein)
APU Starting Subsystem

3.7.8.1.5 Reservoirs. Separate pressurized reservoirs with no hydraulic interconnections are provided for each of the No. 1, No. 2, and No. 3 hydraulic systems. Each reservoir shall have a low–level switch to indicate fluid loss in that system and to coordinate with the reservoir level sensing system. A combination reservoir/accumulator, of a self–displacing design with a volume of 234 cu. in., shall be provided in the APU start system.

3.7.8.1.6 Quantity Gages. An APU start accumulator gas pressure gage, having a dial range of 5000 psig, shall be located on the lefthand cabin overhead near station 398 and shall be readable from the cabin during gas charging or hand pump operation. A piston position indicator shall be provided and shall be readable from the cabin during hand pump recharging without removal of access panels. A reservoir level indicator shall be incorporated for each of the three hydraulic pump modules. The indicators shall be readable with the forward cowling rolled forward. Each pump reservoir shall have a low–level switch which illuminates a low–level indication on the caution panel.

3.7.8.1.7 Pump. The hydraulic pumps for the No. 1, No. 2, and No. 3 systems shall each deliver a minimum of 6.2 gallons–per–minute at 2900 PSI and a maximum pressure of 3050 (±50) PSI at no load. The three (3) hydraulic pumps shall be interchangeable. Each pump shall have a depressurizing valve which reduces the pump starting torque demand. This electrically operated valve is connected only on the No. 3 pump to allow startup with the electric motor.

3.7.8.1.8 Tubing. Tubing shall be installed.

3.7.8.1.9 Not used.

3.7.8.1.10 Filtration. Filtration subsystems shall be provided. A non bypass type filter shall be installed in the pressure circuit and a bypass type line filter shall be provided for the filter case drain and return flow. The filter assemblies shall be of the disposable type, and contain pressure drop indicators on the filter housing. The warning indicator shall be observable and visual access shall be gained without the use of tools. The warning indicator shall be designed to preclude resetting without removal of the disposable filter element. The filters shall be as specified below:

SYSTEM	TYPE	RATING	LOCATION
No.1 System			
Pressure	Non–By Pass	5 Micron	Pump Outlet
Return	By Pass	Absolute	Pump Inlet
No.2 System			
Pressure	Non–By Pass	5 Micron	Pump Outlet
Return	By Pass	Absolute	Pump Inlet
No.3 System			
Pressure	Non–By Pass	5 Micron	Pump Outlet
Return	By Pass	Absolute	Pump Inlet
Reservoir Fill System	Non–By Pass	25 Micron Absolute	Fill Pump Outlet

Secondary screens shall be provided throughout the system in the following components:

Main Rotor Servos (Both Stages)
Tail Rotor Servo (Both Stages)
Collective Boost Servo
Yaw Boost Servo
Number 1 Transfer Module
Number 2 Transfer Module
Pitch Trim Servo Valve
Pitch SAS Servo Valve
Roll SAS Servo Valve
Yaw SAS Servo Valve
Reservoir Fill Pump (Inlet)

3.7.8.1.11 Pressure Gage. A pneumatic pressure gage shall be installed on the gas side of the APU start accumulator to monitor the gas pressure within the accumulator.

3.7.8.2 Pneumatic Subsystem. A pneumatic subsystem operating from bleed air furnished by a main engine or the APU or an external pneumatic power source shall be provided for actuating the main engine starter, providing heating system operation, and ESSS tank pressurization. Bleed air from the main engines shall be utilized for air induction subsystem anti–icing.

3.7.9 Electrical Subsystem

3.7.9.1 Description. The electric subsystem includes all components required for generation, conversion, distribution, and control of electric power and lighting.

3.7.9.2 Electrical Power Supply. The electric power subsystem shall be capable of supplying rated power as determined by SER-70653. The total generating capacity of the aircraft (less kits) shall provide for 35.1 KVA growth in load. Characteristics of all sources shall be as defined in MIL-STD-704 for category B power.

3.7.9.2.1 Primary Electrical Power. The primary electric power subsystem shall consist of two independent systems each capable of supplying power to the required conversion and utilization equipment. The prime source of each system shall be an AC generator mounted on the accessory gearbox and driven by the main rotor at essentially constant speed (12,000 rpm). The AC generators shall be interchangeable. The source for each DC system shall be a transformer-rectifier (converter) powered by the AC primary bus. The transformer-rectifiers (converters) shall be interchangeable. Under normal operation, each power source shall power a bus providing approximately half of the aircraft power requirements.

3.7.9.2.1.1 Primary AC Subsystems. Each primary AC system shall provide 400 Hz, +5 percent, 115/200 volts AC, three- phase-wye power to the AC bus system. The AC power system shall not be paralleled.

3.7.9.2.1.2 Main Power Source. Two oil spray cooled AC generators each rated at 30/45 KVA shall be provided.

3.7.9.2.1.3 Generator Drives. The generator drive shall be compatible with the AC generator and shall provide oil supply, scavenge, and drive end support. The drive configuration shall not compromise electrical requirements.

3.7.9.2.2 Primary DC Subsystem. Each primary DC system shall provide a 28 volt DC supply to the DC bus system. The DC power systems shall not be paralleled.

3.7.9.2.3 Battery. A GFE 24 volt 10 ampere-hour battery shall be installed. A battery quick disconnect MS25182-2 shall be provided. The battery shall be accessible from within the cabin of the aircraft. The location of the battery shall be appropriately marked on the access door. The system shall permit connection, through the existing battery connector, of an external battery for emergency starting. See 3.7.16.2 for winterization kit.

3.7.9.2.3.1 Not used.

3.7.9.2.3.2 Battery Relay. A battery relay shall be provided with on-off control located on the cockpit electrical panel. The relay shall isolate the battery from the normal electrical subsystem when the control is in the OFF position.

3.7.9.2.3.3 Conversion Power. Conversion power shall be provided as specified herein.

3.7.9.2.3.3.1 Converters. Two 200 amp converters shall be provided. The ripple content of the converter shall not exceed 0.4 volt peak-to-peak. The AC input to the converters shall be from separate primary AC busses, the outputs shall not be paralleled.

3.7.9.2.3.3.2 115 Volt AC, 60 Hz Power. Complete provisions for a 115 Volt, 60 Hertz power source (NSN 6130-00-421-5314) shall be provided. This unit, when installed, shall be charged against useful load.

3.7.9.2.4 Generator Control Unit. A generator control unit (GCU) for control of each generating system shall be provided. The GCU shall protect the system from over and under voltage, under frequency and feeder faults, and provide control for cockpit indication of a malfunctioning generator. Disconnection of a faulted generator from the bus shall be automatic. The panel shall detect under frequency, over voltage and under voltage outputs of the generator. Under frequency protection shall be deactivated for flight.

3.7.9.2.5 Emergency Power Equipment. Emergency power shall be provided by the APU generator specified in 3.7.9.2.8.2 herein. The generator shall be capable of supplying power for all flight essential AC and DC busses when both primary generators become unable to supply electric power during flight. Primary AC and DC loads shall be supplied on a priority basis to maintain total load within generator capacity.

3.7.9.2.5.1 Transfer of Emergency Electric Power. The transfer from the primary power source to the emergency power source shall be under the control of the pilot. Loss of the primary electric power system shall be indicated to the pilot. Actuation of the emergency electric source shall not automatically cause the loss of the primary electric power subsystem. The emergency power shall be provided by the APU generator only after malfunction of the primary electric power subsystem or its deactivation by the pilot. Utilization of the APU generator as a backup source of electrical power for blade de-ice (see 3.7.5.11.1) shall not affect the APU generator's emergency power function as specified herein.

3.7.9.2.6 Bus System. Each primary subsystem shall incorporate a primary bus and space and power provisions for a nonessential bus. In addition, one AC and one DC essential bus shall be provided.

3.7.9.2.6.1 Primary Bus System. All loads necessary for the mission of the aircraft in night-icing conditions except blade de-ice (see 3.7.9.2.5.1) shall be connected to the primary bus system. Automatic paralleling of the primary busses shall be provided upon malfunction of either source. The transfer system shall be protected against ground faults to prevent loss of both sources. The combined rating of the primary busses shall not exceed the capacity of one source. No growth shall be provided for the primary bus.

3.7.9.2.6.2 Non-Essential Bus System. Space and power provisions shall be made for addition of non-essential busses to which non-essential loads could be connected. When installed, the non-essential busses shall be dropped automatically in the event of malfunction of either primary source.

3.7.9.2.6.3 Essential Bus System. All loads necessary for recovery of the aircraft under night and instrument conditions shall be connected to the essential bus system. The essential bus system shall be powered normally by the primary electric power subsystem; it shall also be powered by the emergency source as specified in 3.7.9.2.5.1.

3.7.9.2.7 Power Utilization. Equipment requiring electric power shall be individually connected to the bus by means of a circuit breaker or fuse.

3.7.9.2.7.1 Receptacles. An MS3450W16-8S receptacle with a protective cover shall be provided as an electric test receptacle for each electric power system and shall be connected as follows:. phase A to pin A, phase B to pin B, phase C to pin C, ground to pin D, and plus 28 volts DC to pin E. Three MS90298 fuel nozzle grounding jacks shall be provided. An AC utility receptacle, MS3450W20-4S, and a DC utility receptacle, MS3450W16-11S, shall be provided in the cabin. The utility receptacles shall have a protective cover. A 28 VDC power source outlet shall be provided and shall be located overhead in the center of the aft cabin for the installation of a command and control console. The command and control console requires 660 watts at 27.5 VDC for its operation. Two 115 volt, 60 Hz power source outlets shall be provided at readily accessible points near the center of the cargo compartment. The 60 Hz receptacles shall be part of fixed provisions (see 6.3.8.1) for the Medical Evacuation Kit (see 3.7.16.9). The receptacles shall be hospital-grade type Harvey Hubbell part number 8310, or equivalent. The power for the 60 Hz receptacles shall be supplied by the Medical Evacuation Kit power supply NSN 6130-00-421-5314.

3.7.9.2.8 Ground Power. Provision shall be made for checkout and maintenance of the electrical and avionic equipment with the primary electric system inoperative.

3.7.9.2.8.1 External Power. An external power monitor panel shall be installed. The monitor panel shall protect the electric system from an external power source. An "On-Off/Reset" manual control switch to connect the external source to the aircraft bus system shall be provided in the cockpit. An advisory light to indicate "External Power Connected" shall be displayed in the cockpit. One AC external power receptacle shall be provided in accordance with MS90362.

3.7.9.2.8.2 Auxiliary Power Unit Generator. A 20/23.8 KVA, 12,000 rpm self-cooled generator shall be provided. Refer to the rating chart (Figure 36a) for higher ratings under operating conditions. It shall be mounted on, and driven by, the auxiliary power unit. The auxiliary power system shall include a generator control unit similar to that used for the primary electric system. Short circuit overload protection shall be provided.

The auxiliary system shall be in accordance with SES-701044. The generator control switch shall be located on the cockpit overhead console panel. The generator warning light shall be located on the caution/advisory panel.

3.7.9.2.9 Equipment Installation. Electric equipment shall be installed. Non–conductive, fire resistant, flexible paneling shall be used as a liner for all electrical compartments.

3.7.9.2.9.1 Aircraft Wiring. Coaxial cables with tubular metal outer surfaces may be identified without the use of MS14100 tape. The minimum bend radius for wire groups, bundles, and harnesses shall be ten times the diameter of the largest wire contained therein. The minimum wire bend radius shall be three time the wire diameter for supported wires. Slack shall be sufficient to allow one service replacement of connectors. This slack shall be readily available in the area of the connector. Wiring shall be supported independently of and with the maximum practicable separation from fluid carrying lines and tubing except as required for crash survivable wire routing. Where MS21919 cushion clamps are used for primary support of wiring, material type shall be contractor determined. Shielded and jacketed cables shall be used as required for electromagnetic compatibility. As a goal, wiring and equipment will be installed such that a minimum of wiring is disturbed during servicing of equipment. All electrical connectors in armament circuits and all circuits connected to the essential bus shall be installed so that electrical connections or terminations are not exposed. For equipment which must be partially removed to gain access to the electrical connectors, sufficient slack shall be provided in the wiring to that equipment allowing the equipment to be removed the minimum distance to permit the easy mating and unmating of the electrical connectors.

3.7.9.2.9.1.1 Electrical Connectors. Environmental resisting connectors shall be provided for general purpose use.

3.7.9.2.9.1.2 Filter Connectors. Filtered plugs, receptacles and plug/receptacle adapters, in accordance with the contractor's specifications, used to attenuate electromagnetic interference for EME protection shall be intermateable with standard military connectors as described in this specification.

3.7.9.2.9.2 Bonding/Grounding. Electrical bonding and grounding shall be provided as specified in 3.3.2.5 herein.

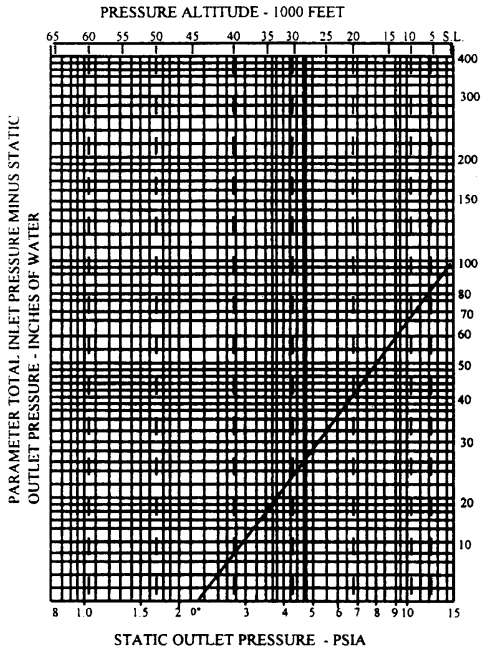

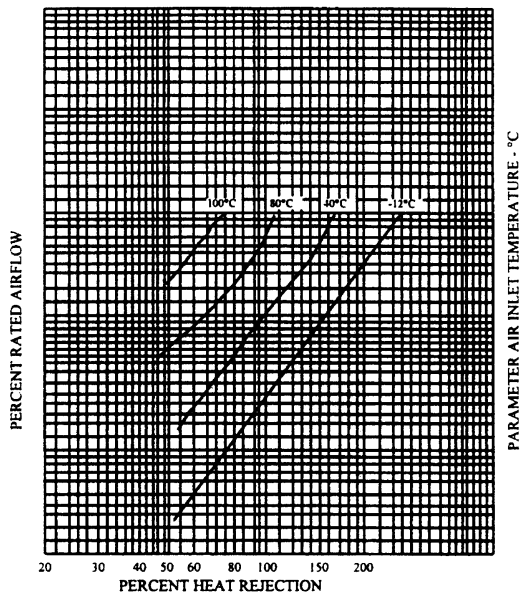

GENERATOR RATING CHART

MAUNFACTURER:	BENDIX ELECTRIC POWER DIVISION
MANUFACTURER P/N:	28B262-35-C
SPECIFICATION NO.:	SES-701044
DWG. NO.:	70550-02032
RATED LOAD:	20 KVA AT 0.75 P.F.
SPEED:	12,000 RPM
PHASE:	3
AIR INLET CONFIGURATION:	3 - in Axial

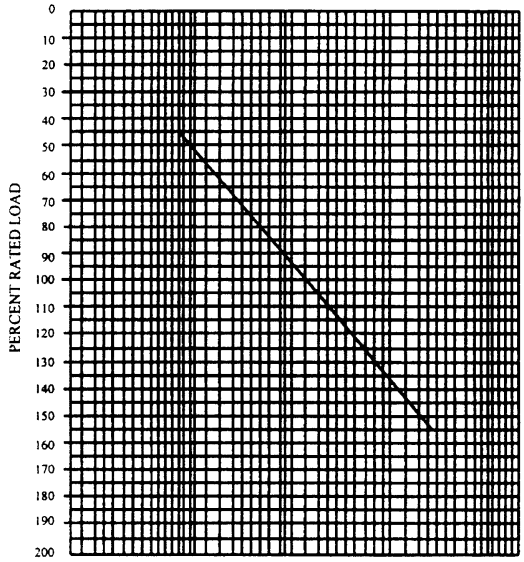

FIGURE 36A. APU GENERATOR ALTITUDE−TEMPERATURE RATING CHART

3.7.9.3 Lighting Subsystem

3.7.9.3.1 Exterior Lighting Subsystem. An exterior lighting subsystem shall be installed and shall meet the requirements as specified herein. The color of lights shall conform to the requirements specified herein.

3.7.9.3.1.1 Navigation Light. Navigation (position) lights shall be provided. The intensity of the navigation lights shall be controlled by a three position "BRT–OFF–DIM" selector switch located in the cockpit and operable by the pilot. A "FLASH–STEADY" selector switch shall also be provided.

3.7.9.3.1.1.1 Infrared Navigation Lights. Infrared navigation lights shall be provided. When energized at nominal operating voltage, the lights shall generate no more than 7.62 x 10–4 footlamberts of visible light and shall produce no less than 5 ±2.0 milliwatts when in the bright mode and no less than .1 ±0.05 milliwatts in the dim mode in the region between 800 and 975 nanometers on the electromagnetic spectrum. Actuation of these lights shall be in accordance with paragraph 3.7.9.3.3.1.1.1. These lights shall be positioned next to the position and formation lights and shall operate from the same controls as the position and formation lights, when the NAV LTS switch is in the IR LTS position (reference paragraph 3.7.9.3.1.1.1).

3.7.9.3.1.1.1.1 Navigation Lights Select Switch. A two position switch ("NORM–IR LTS") shall be provided that, when activated in the "NORM" position, enables the position lights and formation lights. When in the "IR LTS" position, the position lights and the formation lights shall be disabled and the Infrared Navigation Lights shall be enabled.

3.7.9.3.2 Anti–Collision Lights. Two combined high–intensity lights shall be provided for both day and night operation. The lights shall be of the flash–type and designed in accordance with a contractor prepared specification.

3.7.9.3.2.1 Daylight High–Intensity Anti–Collision Light. The daylight high–intensity anti–collision light shall provide a white light with effective candle power as specified in 3.7.9.3.2.6.

3.7.9.3.2.2 Night Anti–Collision Light. The night anti-collision light shall be red with effective candle power as specified in 3.7.9.3.2.6.

3.7.9.3.2.3 Field of Coverage. The lights shall be located to cover all areas in the aircraft plane of flight.

3.7.9.3.2.4 Shielding. The lights shall be positioned so that their direct light does not enter the cockpit.

3.7.9.3.2.5 Flashing Characteristics. The daylight and night anti–collision lights shall both be omnidirectional, shall flash alternately at a rate of 60–80 flashes per minute.

3.7.9.3.2.6 Light Intensity. The light intensity of the daylight and night anti–collision lights shall meet as a minimum, the following values:

Angle Above or Below Mounting Plane of Light in Degrees	*Effective Candle Power Daylight (White)	Night (Aviation Red) Min	Max
+80	100	–	–
+45	875	–	–
+20	1750	75	250
+10	2800	120	250
+ 5	3500	150	250
0	3500	150	250
– 5	3000	120	250
–10	1750	75	250
–20	1000	38	250

* Reflects intensities associated with one light head mounted in horizontal plane.

3.7.9.3.2.7 Controls. Separate control switches shall be provided for the daylight and night anti–collision lights. The controls shall be accessible to both pilots.

3.7.9.3.3 Formation Lights. Formation (station–keeping) fuselage lights–in shall be provided. Electroluminiscent fuselage panels shall be provided. Light intensity shall be adjustable by both the pilot and copilot.

3.7.9.3.4 Landing Light. A 600 watt quartz iodine landing light shall be provided. The landing light shall be extendable from 20° above to 60° below the normal level flight position to provide ground surface illumination forward and beneath the helicopter during landing. The landing light shall be capable of operation in a stowed position without damage from overheating.

3.7.9.3.5 Controllable Searchlight. A 150 watt infrared, dimmable searchlight shall be provided and shall be controllable from both collective stick heads. The searchlight shall be capable of search through the lower hemisphere and of providing vertical lighting during hoisting operations. The searchlight shall be capable of operating in a stowed position without damage from overheating. The light shall be connected to the essential bus. The searchlight shall be ground convertible (AVUM Level function) to an infrared dimmable 250 watt capacity or to a non–infrared, non–dimmable 450 watt capability. A switch shall be provided on the searchlight dimmer unit to permit bypassing the dimming function in the 450 watt mode of operation. The searchlight shall be slewable +100 degrees azimuth and from +20 degrees to –100 degrees elevation.

3.7.9.3.6 Interior Lighting. An interior lighting system shall be provided. Compatibility of CFE components with AN/AVS–7 Night Vision Goggles shall be provided. The color of CFE designed lights shall conform to the requirements described herein. Compatibility shall be achieved by use of lighting that has an optically tailored spectral emission which is blue–green in color with minimal red and infrared emission in the region between 600 and 950 nanometers on the electromagnetic spectrum. Chromaticity shall be restricted to a region that does not vary more than 0.05 x 0.05 units on the CIE (1931) chromaticity diagram. The interior lighting system shall be operable from external and auxiliary power sources. GFP panels shall be as described in 3.7.9.3.6.1.2.

3.7.9.3.6.1 Cockpit Lighting. The cockpit lighting subsystem shall be provided. The CFE cockpit lighting subsystem, shall provide illumination to the crew members for satisfactory day and night flight operation of the intended missions and shall be designed for use with the AN/AVS–7 night vision goggles (NVG). The lighting subsystem shall consist of a primary lighting system for instruments and console panels, a secondary lighting system of glare shield lights, an overhead NVG/White selectable floodlight and three NVG/White selectable utility lights. The lighting subsystem shall be operable from both aircraft and ground power sources.

3.7.9.3.6.1.1 Instrument Panel Lighting. Instrument panel lighting shall be provided. The primary instrument panel lighting system shall include lighting with spectral characteristics in accordance with paragraph 3.7.9.3.6. Separate intensity controls shall be provided for each pilot's flight instruments and for the non–flight instruments. Each control shall be separately connected to the primary AC buses. The excitation shall be 5/115 VAC. The instrument lighting shall have nominal chromaticity coordinates of x = 0.29 ±0.05 and y = 0.65 ±0.05 on the CIE chromaticity diagram.

3.7.9.3.6.1.2 Control Panel Lighting. The primary control panel lighting system including collective grip heads shall consist of integrally lighted panels with spectral characteristics in accordance with paragraph 3.7.9.3.6. When the lighting system is operating at rated voltage (115 VAC), the color of the lettering, numbering, and the markings on CFE control panels shall have nominal color coordinates of x = 0.17 +0.05 and y = 0.65 ±0.05. Separate intensity controls shall be provided for the upper and lower consoles. The excitation for CFE control panels shall be 115 VAC in the upper and 115 VAC, 28 VDC, and 5 VAC in the lower consoles. The following GFP panels shall be provided as ANVIS compatible:

Part Number	Description	Qty Per A/C
AN/ALQ144	IRCM Control	1
AN/APR–39	Radar Warn Control	1
C–8157/ARC	Ciphony Control	3
AN/ARC–186(V)	VHF–AM/FM Control	1
C–11466A/ARC–201A(V)	SINCGARS Control	1
RT–1557A/APX–100(V)	IFF RCVR XMTR	1
CP–1252/ASN–128B	Doppler/GPS Comp Display	1
622–6813–005	ADF Control	1
522–4408–013	Civil Navigation Set Control*	1
RT1518/ARC–164(V)	UHF–AM Radio Set	1
M130	Chaff Dispenser Control	1

* CFE

NOTE: The excitation for the GFP panels shall be 5 VAC or 28 VDC in the lower consoles.

Lighting balance shall be controlled by the low voltage power supply and electroluminescent panel balance control box. ANVIS compatible postlights for the blade de–ice test panel and for the standby compass shall be provided.

3.7.9.3.6.1.3 Lighted Pushbutton Switches. Lighted pushbutton switches shall have spectral characteristics in accordance with paragraph 3.7.9.3.6. When operating at maximum rated voltage all switch legends shall have nominal color coordinates of x = 0.29 ±0.05 and y = 0.65 ±0.05. An intensity control shall be provided for lighted pushbuttons. These lights shall be continuously dimmable through the normal night time range of 0 to 1.0 ±0.5 FL. For daytime, the lights shall operate at a brightness so as to render legends readable when illuminated by direct sunlight (10,000 foot candles).

3.7.9.3.6.1.4 Secondary Panel Lighting. Glare shield lights shall be provided. The spectral characteristics of the lighting shall be in accordance with paragraph 3.7.9.3.6. All of the light intensities shall be controlled by a single variable dimmer.

3.7.9.3.6.1.5 Utility Lights. Three MS17245 type lights shall be provided. Each light shall have a built in selectable NVG compatible blue/green filter in accordance with the characteristics specified in paragraph 3.7.9.3.6. The location of two of the lights shall permit lighting the instrument panel in the event of a malfunction in the primary lighting system. The third light shall be positioned so as to provide supplemental illumination to the lower console. The maintenance light (3.7.9.3.6.3) shall also serve the function of a fourth (Non–NVG compatible) utility light for the crew chief's use.

3.7.9.3.6.1.6 General Cockpit Lighting. An overhead floodlight assembly illuminates the cockpit with NVG.compatible light or with white light (as specified in 3.7.9.3.6). A three position toggle switch located on the assembly shall allow for actuation of the light: Blue/Off/White. The white floodlight system shall provide a maximum intensity of at least 10 foot candles of surface illumination at the instrument panel.

3.7.9.3.6.1.7 Visual Signals. Warning, caution and advisory lights shall be provided. Two master caution lights, one on the pilot's instrument panel and one on the copilot's instrument panel, shall be provided.

3.7.9.3.6.2 Troop/Cargo Compartment Lights. Three selectable NVG (Night/Vision Goggle compatible blue–green Light)/White cargo compartment lights shall be provided. These lights shall provide illumination necessary for the performance of all required tasks. A "BLUE/ WHITE" selector switch and a variable intensity control shall be provided. The selector shall be Lever–Locked out of the white position. When in the BLUE position the light shall be in accordance with the characteristics specified in 3.7.9.3.6.

3.7.9.3.6.3 Inspection and Maintenance Lights. One portable inspection flood light, equipped watt a 20 watt MS35480–2 lamp, shall be provided for maintenance personnel. The light assembly shall be equipped with a spring loaded mounting clamp and a universal swivelling head. The light shall be provided with a 20 foot power cable for connection to receptacles located in the mid–cabin ceiling and tail rotor pylon area. The maintenance inspection light receptacles shall operate with the battery switch in the off position.

3.7.9.3.6.4 Cargo Hook Lights. Two electroluminescent panel lights shall be provided for illumination of the cargo hook well. The cargo hook lights shall be controlled by a two position (on–off) switch located in the cockpit and operable by the pilot. A dimming unit shall be provided.

3.7.10 Avionic Subsystem

3.7.10.1 Intercommunications Subsystem. A C-6533/ARC intercommunications subsystem shall be installed and meet the performance requirements of SCL-T-0048. The subsystem shall consist of five government furnished intercommunication set controls C-6533/ARC and associated items of contractor furnished equipment which shall include individual receiver selection, microphone input selection, and headset audio.

3.7.10.1.1 Component Location. The location of the C-6533/ARC intercommunication set control shall be as follows:

a. An intercommunication station shall be provided at each of the four crew member stations. A fifth intercommunications station shall be provided in the troop/cargo compartment.

b. The crewmember's intercommunications stations shall be equipped with both hand and foot keying capabilities.

c. The troop/cargo compartment intercommunications station shall be equipped with an H-250/U, NSN 5965-00-043-3463 government furnished handset complete with an 8 foot retractile cord.

3.7.10.1.2 Transmit Selector Switch. The transmit selector switch of the C-6533 control at all five stations shall be wired to provide the following functions:

Selector Switch Position	Function
ICS	Intercommunication (aft stations)
1FM	Transmit-receiver VHF-FM Communication AN/ARC-201 SINCGARS
2 UHF-FM	Transmit-receiver UHF Communication AN/ARC-164(V)
3 VHF-AM/ FM	Transmit-receiver VHF-AM Communication AN/ARC-186(V)
4 VHF-FM)	Transmit-receiver FM Communication AN/ARC-201 SINCGARS
5	SPARE

3.7.10.1.3 Receiver Switches. The receiver switch on the C–6533/ARC control at all five stations shall be wired to provide the following function:

Receiver Switch	Function
1	Receiver, FM Communications SIN CGARS
2	Receiver, UHF Communications
3	Receiver, VHF Communications
4	Receiver, FM Communications SIN CGARS
5	Spare
AUX	VOR/LOC
NAV	ADF

3.7.10.1.4 Description Placards. Description placards showing all available functions at the C–6533/ARC intercommunication stations, shall be provided. Placards shall not be mounted on the equipment proper.

3.7.10.1.5 External Connectors. Two contractor furnished external connectors and one walking cord with microphone keying facilities U–94A/U shall be provided. The external connectors shall be connected to the left and right hand gunner's C–6533/ARC intercommunication set control.

3.7.10.1.6 Cords and Connectors. Contractor furnished microphone cord assemblies consisting of special shielded microphone cord and the connectors specified below shall be installed at each intercommunication station:

Station		Connector
a.	Pilot	U–92A/U
b.	Copilot	U–92A/U
c.	Gunner (2)	U–94A/U
d.	Troop/cargo	U–183/U
e.	External stations (2)	MS 3474W106S

3.7.10.1.7 Microphone Keying. Actuation of the microphone keying circuits shall be accomplished as specified herein.

3.7.10.1.7.1 Pilot and Copilot Stations. Transmit interphone talk switch capability for both pilot and copilot shall be provided. Foot operated press to talk switches shall be installed at pilot and copilot locations and a three position push to talk switch shall be installed in the cyclic controls. Actuation of pilot and copilot microphone keying circuits shall be accomplished by either of the foot operated or cyclic control switches. The cyclic control three position push to talk switch shall function as follows:

a. Position 1 – microphone not keyed.

b. Position 2 – microphone connected to interphone line through the transmit interphone selector switch on the C-6533/ARC control.

c. Position 3 – microphone connected to selected radio transmitter input through transmit interphone selector switch on the C-6533/ARC control.

3.7.10.1.7.2 Gunner Stations. Microphone keying at the crew chief/gunner and gunner stations shall be accomplished by the push to talk switch on the U-94A/U connector or a foot operated press to talk switch.

3.7.10.1.7.3 External Connector. External connector microphone keying shall be accomplished by the push to talk switch on the U-94A/U connector on the walking cord.

3.7.10.1.7.4 Troop/Cargo Compartment Station. Microphone keying at the troop/cargo compartment station shall be accomplished by the push to talk switch on the handset.

3.7.10.1.8 Stowage. Stowage provisions shall be made for the handset assembly, the external walking cord, and other non-secured intercommunication subsystem items when not in use. This equipment shall be included in empty weight.

3.7.10.2 Antennas. Antennas shall be provided.

3.7.10.3 VHF-FM Communications No. 1 and Homing. A government furnished remote type radio set AN/ARC-201 shall be installed and shall meet the performance requirements of military specification AV-IT5802-0001A except that homer bearing errors off the tail shall not exceed ±15 degrees. Controls for the Remote type Radio set ARC-201 shall be installed for control by pilot and copilot.

3.7.10.3.1 AN/ARC-201 Audio Distribution. The AN/ARC-201 VHF-FM receiver audio output signal shall be connected to receiver No. 1 input circuit of the five C-6533/ARC communications stations as specified in 3.7.10.1.3 herein. The microphone keying and transmitter audio input signals shall be connected to selector switch position No. 1 of all five C-6533/ARC intercommunications stations as specified in 3.7.10.1.2 herein.

3.7.10.3.2 AN/ARC-201 Homing Visual Presentation. The FM homing signal information received from the AN/ARC-201 shall be presented on the pilot and copilot's vertical situation indicator as follows:

a. Left and right steering on the localizer deviation needles. Indicator meter damping networks shall be provided.

b. Signal strength information will not be displayed.

c. Signal adequacy to the navigation flags. Signal information selection shall be controlled through the appropriate selector switches.

d. For command information see 3.7.10.26.

3.7.10.3.3 VHF-FM Communication Antenna. A contractor furnished airframe integrated FM communication antenna shall be provided for the radio set AN/ARC-201. The antenna shall be flush mounted. The antenna performance shall be in accordance with AV-IT5802-0001A.

3.7.10.3.3.1 Antenna Characteristics. The installed antenna shall be capable of simultaneous reception over both guard and any operational frequency and shall have characteristics as specified herein.

3.7.10.3.3.1.1 Frequency Range. The antenna shall operate over the frequency range of 30 to 87.975 megahertz.

3.7.10.3.3.1.2 Antenna Terminating Impedance. The antenna shall have an unbalanced nominal 52 ohm terminating impedance.

3.7.10.3.3.1.3 Voltage Standing Wave Ratio (VSWR). The voltage standing wave ratio of the antenna shall not exceed five to one.

3.7.10.3.3.1.4 Polarization. The antenna shall provide predominantly vertical polarization.

3.7.10.3.3.1.5 Azimuthal Coverage. The antenna shall provide omnidirectional coverage as specified herein in the horizontal plane. As the design goal, the difference between the maximum and minimum field strength of the antenna, when integrated into the aircraft, shall not be greater than 6 db. However, in no case shall more than 50 percent of the nulls be greater than 10 db down from the maximum, nor shall any null be greater than 20 db down from the maximum when measured at least every 15 degrees in azimuth in the horizontal plane.

3.7.10.3.3.1.6 Radio Frequency Power Input. The antenna shall operate at an average input radio frequency power of 50 watts without mechanical and electrical failure or degradation of performance.

3.7.10.3.3.1.7 Harmonic and Spurious Outputs. The antenna shall not increase the harmonic and spurious outputs of radio set AN/ARC–201 above the levels measured with the equipment operating into a 50 ohm dummy load.

3.7.10.3.4 VHF–FM Homing Antenna. A contractor furnished homing antenna shall be provided for radio set AN/ARC–201.

3.7.10.3.4.1 FM Homing Antenna Characteristics. The installed antenna shall have characteristics as specified herein.

3.7.10.3.4.1.1 Frequency Range. The antenna shall be broadbanded and operate over the frequency range of 30 to 87.975 megahertz.

3.7.10.3.4.1.2 Antenna Terminating Impedance. The antenna shall have an unbalanced nominal 52 ohm terminating impedance.

3.7.10.3.4.1.3 Voltage Standing Wave Ratio (VSWR). The voltage standing wave ratio of the antenna shall not exceed five to one.

3.7.10.3.4.1.4 Polarization. The antenna shall provide predominantly vertical polarization.

3.7.10.3.4.1.5 Homing Antenna Pattern. The antenna pattern shall be a cardioids with maximum strength to the side of the aircraft. The longitudinal axis of the intersection of the two cardioids shall be aligned with the longitudinal axis of the aircraft.

3.7.10.4 UHF Communication. The government furnished radio set AN/ARC-164 shall meet the performance requirements of MIL-I-49091(EL) and shall be installed for control by pilot and copilot.

3.7.10.4.1 Audio Distribution. The receiver audio output signal shall be connected to receiver No. 2 input circuit of the five C-6533/ARC intercommunication stations as specified in 3.7.10.1.3 herein. The microphone keying and transmitter audio input signals shall be connected to transmit selector switch position No. 2 of all five C-6533/ARC intercommunication stations as specified in 3.7.10.1.2 herein.

3.7.10.4.2 UHF Communications Antenna. A contractor furnished UHF antenna shall be provided. The antenna performance shall be in accordance with MIL-I-49091(EL).

3.7.10.4.2.1 UHF Communication Antenna Characteristics. The installed UHF communications antenna shall have characteristics as specified herein.

3.7.10.4.2.1.1 Frequency Range. The antenna shall be a broadbanded antenna and operate over the frequency range of 225 to 400 megahertz.

3.7.10.4.2.1.2 Antenna Terminating Impedance. The antenna shall have an unbalanced nominal 52 ohm terminating impedance.

3.7.10.4.2.1.3 Voltage Standing Wave Ratio (VSWR). The voltage standing wave ratio of the UHF antenna shall not exceed two and one-half to one.

3.7.10.4.2.1.4 Polarization. The antenna shall provide predominantly vertical polarization.

3.7.10.4.2.1.5 Azimuthal Coverage. The antenna shall provide omnidirectional coverage, as specified herein, in the horizontal plane. No more than 50 percent of the nulls shall be greater than 10 db down from the maximum, nor shall any null be greater than 20 db down from the maximum when measured at least every 15 degrees in azimuth in the horizontal plane.

3.7.10.4.2.1.6 Radio Frequency Power Input. The antenna shall operate at an average input radio frequency power of 50 watts without mechanical and electrical failure or degradation of performance.

3.7.10.4.2.1.7 Harmonic and Spurious Outputs. The antenna shall not increase the harmonic and spurious outputs of the AN/ARC-164 above the levels measured with the receiver/transmitter operating into a 50 ohm dummy load.

3.7.10.5 AN/ARC-186(V) VHF-AM Communications. The government furnished remote type AN/ARC-186(V) radio set shall meet the performance requirements of AV-IT5802-0001A. The AN/ARC-186(V) control panel shall be installed for control by pilot and copilot.

3.7.10.5.1 Audio Distribution. The receiver audio output signal shall be connected to receiver No. 3 input circuit of the five C-6533/ARC intercommunication stations as specified in 3.7.10.1.3. The microphone keying and transmitter audio input signals shall be connected to selector switch position No. 3 of all five C-6533/ARC intercommunication stations as specified in 3.7.10.1.2.

3.7.10.5.2 AN/ARC-186(V) VHF-AM Antenna. A contractor furnished VHF-AM antenna to be used with the remote AN/ARC-186(V) radio set shall be provided. The antenna performance shall be in accordance with AV-IT5802-0001A for the frequency range of 116 to 150 megahertz.

3.7.10.5.2.1 AN/ARC-186(V) VHF Antenna Characteristics. The installed VHF antenna shall have characteristics as specified herein.

3.7.10.5.2.1.1 Frequency Range. The antenna shall be broadbanded and operate over the frequency range of 116 to 151.975 megahertz.

3.7.10.5.2.1.2 Antenna Terminating Impedance. The antenna shall have an unbalanced nominal 52 ohm terminating impedance.

3.7.10.5.2.1.3 Voltage Standing Wave Ratio (VSWR). The voltage standing wave ratio shall not exceed two and one-half to one.

3.7.10.5.2.1.4 Polarization. The antenna shall provide predominantly vertical polarization.

3.7.10.5.2.1.5 Azimuthal Coverage. The antenna shall provide omnidirectional coverage, as specified herein, in the horizontal plane. No more than 50 percent of the nulls shall be greater than 10 db down from the maximum, nor shall any null be greater than 20 db down from the maximum when measured at least every 15 degrees in azimuth in the horizontal plane.

3.7.10.5.2.1.6 Radio Frequency Power Input. The antenna shall operate at an average input radio frequency power of 50 watts without mechanical and electrical failure or degradation of performance.

3.7.10.5.2.1.7 Harmonic and Spurious Outputs. The antenna shall not increase the harmonic and spurious outputs of the AN/ARC-186(V) above the levels measured with the receiver/transmitter operating into a 50 ohm dummy load.

3.7.10.6 Communication Security. Complete provisions shall be made for the installation of three government furnished communication security equipment TSEC/KY-58, one each for use with each VHF/FM radio set AN/ARC-201 and with radio set AN/ARC-164.

3.7.10.6.1 Control. The provisions for the government furnished control indicator assemblies Z-AHP shall be convenient to the pilot and copilot.

3.7.10.6.2 Communication Security Requirements. The aircraft shall meet communications security requirements to the extent that the government furnished equipment meets these requirements.

A placard shall be provided and located to be plainly visible to any intercom operator. The placard shall contain the following statement:

"NON-SECURE RADIOS WILL NOT BE KEYED WHEN USING ANY SECURE RADIO OR THE INTERCOM FOR CLASSIFIED COMMUNICATIONS."

3.7.10.7 Second VHF/FM Radio. Complete provisions shall be made for the installation of a second government furnished FM radio set AN/ARC-201. The second radio set AN/ARC-201, when installed, shall be controlled by the pilot or copilot.

3.7.10.7.1 Second VHF-FM Audio Distribution. The second AN/ARC-201 receiver audio output signal shall be connected to monitor No. 4 input circuit of the five C-6533/ARC intercommunications stations. The microphone keying and transmitter audio input signals shall be connected to selector switch No. 4 of the five C-6533/ARC intercommunications stations, (See 3.7.10.1.2 and 3.7.10.1.3 herein).

3.7.10.7.2 Second VHF-FM Radio Communication Antenna. A contractor furnished FM communication antenna shall be provided for use with the second radio set AN/ARC-201. The antenna shall be designed and located to provide FM to FM retransmission (simultaneous operation). The antenna shall meet the requirements specified in 3.7.10.3.3 herein.

3.7.10.8 Auxiliary Communication Provisions

3.7.10.8.1 Not used.

3.7.10.8.2 Retransmission. Manual switching and interconnections to enable retransmission between any two communication sets shall be provided. The radio retransmission range shall be in accordance with AV-IT5802-0001A and MIL-T-49091(EL) except that the FM1/FM2 combination shall comply with AV-IT5802-0001A to the extent that the government furnished equipment is compliant with these requirements. The necessary retransmission switching and wiring shall not degrade or limit the normal communication requirement. The switch will include an "off" position.

3.7.10.9 Not used.

3.7.10.10 Civil Navigation Set AN/ARN-147(V). An AN/ARN-147(V) civil navigation set shall be installed.

3.7.10.10.1 Visual Presentation. VOR/LOC deviation information from the AN/ARN-147(V) shall be displayed on the pilot and copilot's horizontal and vertical situation indicators. Omnibearing information shall be selectively displayed on the No. 2 bearing pointers of the pilot and copilot's HSIs through appropriate switching circuitry. The "TO-FROM" signal shall be displayed on the pilot and copilot's HSIs and the weak signal information shall be displayed on both VSI and HSI flag alarms. Glideslope information shall control the glideslope bug of the pilot and copilot's VSI. Marker beacon information shall actuate a light indicating outer, middle, and inner marker passage. (For control command information displays see 3.7.10.26 herein.)

3.7.10.10.2 Audio Signal Distribution. The VOR/LOC and Marker Beacon audio shall be applied to the C-6533/ARC intercom.

3.7.10.10.3 Control. A control unit shall be located for use by the pilot and copilot.

3.7.10.10.4 Antennas. Two blade type, VOR/LOC antennas, shall be provided. A marker beacon antenna, flush mounted, shall be provided and shall perform in accordance with MIL-A-5999. A glideslope antenna will be provided and shall perform in accordance with MIL-A-6325.

3.7.10.11 Automatic Direction Finder. A government furnished direction finder set AN/ARN-149 shall be installed.

3.7.10.11.1 Audio Distribution. The receiver audio output signal shall be connected to the navigation input circuit of the five C-6533/ARC intercommunication stations (see 3.7.10.1.3 herein).

3.7.10.11.2 Visual Presentation. The bearing signal information received by direction finder set AN/ARN-149(V) shall be selectively presented to the number 2 bearing pointer of the pilot and copilot's horizontal situation indicator through the appropriate selector switch circuitry.

3.7.10.11.3 Antenna. A government furnished antenna shall be installed for use with direction finder set AN/ARN-149(V).

3.7.10.11.4 Not used.

3.7.10.11.5 Not used.

3.7.10.11.6 Control. A government furnished ADF control for use with the direction finder set AN/ARN-149(V) shall be installed. The control shall be for use by pilot and copilot.

3.7.10.12 Doppler Navigation System. The government furnished Doppler/GPS System AN/ASN-128B shall be installed.

3.7.10.12.1 Visual Presentation. Bearing to destination (checkpoint) shall be presented on the number one bearing pointer of the HSI. Distance to destination shall be presented on the distance window of the HSI, and the course deviation shall be presented on the deviation bar of the HSI and VSI. For command information displays see 3.7.10.26.

3.7.10.12.2 Antenna. The government furnished antenna shall be installed.

3.7.10.13 Not used.

3.7.10.14 LDNS, VOR/ILS and FM Homing. Switching circuitry to selectively present appropriate course deviation, glideslope, bearing to station, signal strength flag, and the various navigation systems signal outputs to both pilot and copilot indicators, shall be provided.

3.7.10.15 Gyromagnetic Compass. The government furnished gyromagnetic compass set AN/ASN-43 shall be installed and shall meet the performance requirements of SCL-T-0026 and MIL-STD-765.

3.7.10.15.1 Signal Presentation. The magnetic heading signal information derived from the AN/ASN-43 shall be presented on compass cards of the pilots and copilot's horizontal situation indicator display and be provided to the AN/ARN-147(V) and the AN/ASN-128B.

3.7.10.15.2 Compass Control. Switching circuitry shall be provided to allow use of the AN/ASN-43 in either the free gyro (DG) or magnetically slaved (MAG) mode. The switch shall be conveniently located for use by pilot and copilot. A contractor furnished compass synchronization control and indicator shall also be provided. The MAG-DG and synchronization control shall be placarded.

3.7.10.15.3 Compass Transmitter. A government furnished compass transmitter T-611/ASN and magnetic flux compensator CN-405/ASN shall be installed and used with the direction gyro CN-998B/ASN-43.

3.7.10.16 Identification. The identification subsystem shall include the installation of the government furnished transponder set AN/APX-100 and complete provisions for the government furnished computer KIT-1A/TSEC as specified herein.

3.7.10.16.1 Transponder. Transponder Set AN/APX-100 shall meet the performance requirements of ET-615.

3.7.10.16.2 Audio Distribution. The mode four audio output signal shall be connected to the direct input circuit of the pilot's and copilot's C-6533/ARC communication stations.

3.7.10.16.3 Antenna. A flush mounted bottom antenna and a top mounted antenna shall be incorporated to provide spherical coverage about the aircraft.

3.7.10.16.4 Computer. Complete provisions for the government furnished computer KIT-1A/TSEC shall be installed and meet the performance requirements of ET-615.

3.7.10.16.5 Mount. The government furnished mount MT-3949A/U for KIT-1A/TSEC shall be installed.

3.7.10.16.6 Cable Connector. Dummy receptacles for securing computer KIT-1A/TSEC electrical cable connectors, when not installed, shall be provided.

3.7.10.16.7 Altitude Encoding. The government furnished AAU-32/A altimeter encoder shall be installed for use with transponder AN/APX-100.

3.7.10.17 Troop Unit Commander Antenna. A contractor furnished troop unit commander VHF/FM antenna shall be installed for utilization with the AN/PRC-25, AN/PRC-77 or equivalent radio set. Its quick disconnect outlet shall be in the troop cargo compartment.

3.7.10.18 Proximity Warning Device. Space, weight, and power shall be provided for a government furnished proximity warning device. The warning device, when installed, shall warn the pilot and/or copilot of the close proximity of a second aircraft. Provisions shall be as follows for the Indicator/Control Unit: width, 5.75 inches; height, 3.75 inches; depth, 8.5 inches; weight, 5.0 pounds; and power, 1.5 amps at 28 volts DC. Provisions for the antenna (minimum of two required) shall be as follows: diameter, 3.0 inches, height, 3.0 inches; and weight, 4.0 ounces. Total installed weight shall be approximately 5.5 pounds. The Proximity Warning Device (when installed) shall be a part of the aircraft Useful Load.

3.7.10.19 Contractor Furnished Electronics. The following contractor furnished electronics shall be provided unless otherwise specified:

Item No.	Quantity Aircraft	Description	Identification
1	1	Multisystem Antenna for: #2 VHF-FM VHF-AM	70600-01019
2	1	#2 VHF-FM Communications Antenna Coupler	70600-01010
3	1	#1 VHF-FM Antenna	70600-06002
5	2	FM Homing Antenna	70600-02017
6		Deleted	
7	1	Compass Set Controller	7090101000
8	2	IFF Antenna	70600-02010
9	2	VOR/LOC Antenna	70600-05002
10	1	UHF/AM Cavity Antenna	70600-03002
11	1	Radio Retransmit Control Panel 7055001008	
12	1	Glideslope Antenna for AN/ARN-147(V)	70600-01043
13	1	Marker/Beacon Antenna for AN/ARN-147(V)	70600-02011
14	1	VHF/AM In-line Antenna Filter	70600-01012
15	2	VHF/FM In-line Antenna Filter	70600-01011
16		Deleted	
17	3	Mounts for TSEC/KY-28 or TSEC/KY-58	5166060036
18	1	Troop Commander Antenna	70600-06001
19	1	Command Instrument System Processor and Mounting Rack	70600-01038
20	1	Battery BB716/U	6140-01-089-8134

3.7.10.19.1 Environmental Service Conditions. The following service conditions described by MIL-E-5400 with the following exceptions and deletions shall apply to all contractor furnished electronics:

a. Acceleration – The equipment shall operate without degradation in specified performance, and shall sustain no physical damage when exposed to acceleration levels up to 6g.

b. Rain – The equipment shall operate without degradation in specified performance, and shall sustain no physical damage during period of heavy precipitation.

c. Bench Handling – The equipment shall withstand shock encountered in servicing.

d. Altitude Transport – The equipment shall withstand air transport in altitudes to 50,000 feet above sea level.

e. Temperature Storage – The non-operating temperature range shall be −54°C (−65°F) to +71°C (+160°F).

f. Vibration – Vibration Curve IV (frequency to 500 Hz) of MIL-E-5400 shall apply regardless of equipment location in aircraft. For vibration isolated equipment with isolators removed, Curve II of MIL-E-5400 shall be modified as follows: vibration frequency of 5 Hz to 20 Hz at a double amplitude of 0.10 inch and a vibration frequency of 20 Hz to 500 Hz at an acceleration level of 2g.

g. Fungus and Salt Atmosphere – Resistance to fungus growth and slat atmosphere shall be required.

3.7.10.20 Not used.

3.7.10.21 Not used.

3.7.10.22 Radar Receiving Set AN/APR-39. Complete provisions shall be made for the government furnished AN/APR-39(V)-1 Radar Signal Detecting Set.

Space, weight and power provisions shall be made for the AN/APR-39(V)-2. Provisions shall include the following:

Signal Processor	
Space	4.9 in. wide, 6.3 in. high, 13 in. long (including mount)
Weight	11.5 lbs
Power	3 amps max at 28V D.C.

3.7.10.23 Absolute Altimeter AN/APN-209A. The government furnished Absolute Altimeter AN/APN-209A shall be installed.

3.7.10.24 Countermeasure Set. Complete provisions shall be provided for government furnished Countermeasure Set, AN/ALQ-144A(V).

3.7.10.25 Dispenser System. Complete provisions shall be provided for the government furnished M-130 Dispenser System. Provisions shall be made for one (1) payload module chaff dispenser only. The dispenser system (when installed) shall be part of aircraft Useful Load.

3.7.10.26 Command Instrument System (CIS). A government furnished CIS shall be installed. The CIS shall receive installed radio navigation equipment data, process the data, and provide pitch, roll, and collective steering, commands to approach and maintain a desired flight path. The steering commands shall be selectively displayed for the following modes:

- Heading Hold
- Doppler Navigation
- VOR Navigation
- Enroute FM Homing
- ILS Navigation, including course capture, glide slope capture, altitude level off, and go-around (space provisions shall be made for MLS/CIS). An automatic deceleration mode shall be provided but this mode shall be deactivated.
- Altitude hold

3.7.10.27 Crash Locator Beacon. Space and power provisions shall be made for an impact activated, crash locator beacon capable of being manually activated or deactivated by the crew before and after emergency landings.

3.7.10.28 Global Positioning System. Space provisions shall be made for a Global Positioning System.

3.7.10.29 Heads-Up Display AN/AVS-7. Complete provisions shall be made for the government furnished AN/AVS-7 Heads-Up Display.

3.7.11 Armament Subsystem

3.7.11.1 Description and Components. The armament subsystem shall consist of the following components:

Qty	Nomenclature	Identification
2	7.62 mm machine guns, M60D	NSN–1005–00–909–3002
2	Pintle mount assemblies	70751–02023–043/044
2	Box, Ammunition, 7.62 mm, 200 rounds	NSN–1005–00–903–1090
2	Ejection Control Bags	NSN–1005–00–903–1088

The M60D machine guns, ammunition boxes, and ejection control bags shall be government furnished and shall be utilized without modification. The pintle mount assemblies shall be provided by the contractor. Flight reloading time shall not exceed four–minutes–per–weapon utilizing one gunner. The armament subsystem shall be capable of being fired with the cargo doors opened or closed and by gunners protected from extreme climatic conditions (wearing protective extreme weather gear). Additionally, the armament subsystem shall be capable of continuous fire while the doors are being opened or closed.

3.7.11.2 Pintle Mounts. The contractor furnished pintle mounts shall be mounted on hard points at each side of the forward mid–fuselage section at each of the crewchief/gunner stations. Mechanical stops shall be provided on each pintle mount to prevent the armament from traveling beyond set limits and causing ballistic damage to the aircraft. The installation shall incorporate a positive locking device that shall prevent uncontrolled weapon traverse during a crash sequence from causing injury to personnel. Aircraft hard points shall also be capable of accepting any of the following weapons: 5.56 mm multi barrel automatic weapon; 7.62 mm multi barrel automatic weapon with 2000 rounds of ammunition for these alternate weapons.

3.7.11.3 Gunner Windows. A sliding hatch on each side of the aircraft at the crewchief/gunner stations shall provide the gunners with an opening 34 inches high by 28 inches wide.

3.7.11.3.1 Field of Fire. The field of aim and fire of the weapons shall be not less than 160 degrees in azimuth, 70 degrees in depression, and +1.5 degrees in elevation.

3.7.11.3.2 Gun Storage. The geometry of each gunner's station shall allow the gun to be swung inboard so that the gunner's window can be closed. When not in use, the gun shall be locked in a stowed position.

3.7.11.4 Ammunition Complement. The full ammunition complement shall be 1100 rounds of linked 7.62 ammunition.

3.7.12 Furnishings and Equipment

3.7.12.1 Crew Station. Crew stations for the pilot, copilot, and crew chief/gunner shall accommodate the 5th through 95th percentile Army aviator or troop as defined in TR-72-52CE and wearing either tropical or arctic flight clothing, survival gear, and body armor. Handholds, kick steps, and steps shall be provided. Flight crew station interior colors shall be applied and all non-transparent surfaces in the forward visual area shall be finished with low reflective (black). The forward visual area is defined as all painted surfaces forward of the blackout curtain attaching points located immediately behind the pilot and copilot seats. Except for instruments and displays, the cockpit interior shall have a reflectance value of less than 0.10. The furnishings and equipment for the aircraft shall be as further specified herein.

3.7.12.1.1 Pilot Seats. Pilot and copilot seats shall be government furnished and shall be in accordance with ATCOM Specification 1680-UH60-000. Capability for inflight extraction of either pilot from the seat in the event of injury requiring removal shall be included.

A raised cover beneath pilot/copilot seats shall be provided to prevent foot entrapment/shearing during seat vertical stroking.

3.7.12.1.2 Crewchief/Gunner Seats. Two sideward facing crewchief/gunner's seats shall be provided in the forward cabin area adjacent to the gun stations. The crewchief/gunner's seats shall be interchangeable. The seats shall be located to permit the gunners to fire the armament through the full range allowed by the limit stops (see 3.7.11.2 herein). Shoulder harnesses and lap belts with inertia reels shall be provided to enable the gunner to reel out the necessary distance to operate the machine guns. Each lap belt inertia reel shall have a manual lock feature. The shoulder harnesses and belts shall be provided with a single point release mechanism; in addition, seat belts shall retract automatically and stow in a flush position. The crewchief/gunner's seats shall be constructed in accordance with the requirements in 3.7.12.2.2 herein. The shoulder harness inertia reels shall be attached to the seat back.

3.7.12.1.3 Control/Displays. Controls shall be located so the aircraft can be flown by either the pilot or copilot. The anti-torque pedals shall be adjustable horizontally. Provisions shall be made to prevent the pilots' feet from submarining under the anti-torque pedals in event of a survivable crash condition. The cyclic grip shall be CFE and shall provide for control of the following subsystems functions:

1. Stick Trim Control
2. Trim Release
3. Cargo Release
4. Panel Lights
5. ICS/Radio
6. Go-Around
7. Stabilator Slew-up Switch

All switches and controls shall be operable with standard issue winter flight gloves. No sharp corners or cockpit controls shall be located within the head and upper torso strike envelope of a crewman restrained by both a lap belt and a shoulder harness. All control and display nomenclature shall be visible from the design eye position.

3.7.12.1.4 Map/Data Case. Map/data cases shall be provided in the cockpit accessible to the pilot and copilot.

3.7.12.1.5 Checklist Pocket. A checklist pocket for storage of a checklist shall be provided in the cockpit accessible to both the pilot and copilot.

3.7.12.1.6 Deleted.

3.7.12.1.7 Fire Extinguishers. FR 23–4–11848 government furnished fire extinguishers shall be installed, one between the pilot and copilot seats and one adjacent to crew chief/gunner's seat. Each of these crew members shall have access to his fire extinguisher without leaving his normal seat.

3.7.12.1.8 First Aid Kit. Stowage provisions shall be made for government furnished first aid kits at the pilot, copilot, and crewchief/gunner's station.

3.7.12.1.9 Crash Ax. A government furnished crash ax shall be installed in the aircraft accessible to the crew.

3.7.12.1.10 Mission/Survival/Emergency Equipment Stowage. Stowage provisions shall be made for mission equipment and government furnished survival and emergency gear.

3.7.12.1.11 Weapons and Smoke Grenade Rack. A rack shall be provided at each gunner's station for securing weapons, one (1) rifle and six smoke grenades at each station.

3.7.12.1.12 Windshield Wiper. An electric windshield wiper system shall be provided for the pilot and copilot. The wipers shall be capable of clearing the windshield and maintaining visibility during flight in up to heavy rain at flight velocities ranging from hover to 110 knots.

3.7.12.1.13 Blackout Devices. Complete provisions shall be made for the installation of a Blackout Devices Kit as specified in 3.7.16.4 which shall reduce visual detectability of the aircraft during night operations when the cabin is illuminated. When installed, the Blackout Devices Kit shall be included in Useful Load.

3.7.12.1.14 Rearview Device. Space and weight provisions for a rearview device when installed, the weight of the rearview device shall be included in Useful Load.

3.7.12.1.15 Locking System. A locking system shall be provided to secure the aircraft. It shall consist of a key operated door and ignition switch locks. Doors without a key lock shall be lockable from inside the aircraft.

3.7.12.2 Troop/Cargo Compartment. The furnishings and equipment for the troop/cargo compartment shall be as specified herein. Access between the flight crew station and the troop/cargo compartment shall be provided when carrying eleven (11) combat equipped troops.

3.7.12.2.1 Troop Seats. Seating for ten troops shall be provided in the troop/cargo area of the cabin. The seat shall be one seat modules which are interchangeable from position to position. Four seats shall be positioned along the aft cabin wall. Six seats, three facing rearward and three forward, shall be positioned approximately in the center of the cabin.

All seats shall be attached to the cabin floor and overhead structure. All troop seats shall be removable and stowable outside the cargo area in the equipment compartment over the fuel tanks (see 3.7.3.1.7.1). Lap belts shall be provided at all seats, including the three (3) alternate troop seats (see 3.7.3.1.4.2.6) when installed, and shall be adjustable to torso size. The lap belt shall be capable of being unlocked with one hand. Seat belts are manually adjustable and shall not stow in a flush position. Shoulder harnesses shall be provided for all troop seats, including the three (3) alternate troop seats (see 3.7.3.1.4.2.6) when installed. Troop seat lap belt and shoulder strap adjusters shall accommodate the 95th percentile arctic clothed and equipped occupant. Unbuckled and fully extended lap belts shall not hang down far enough to contact aircraft floor. Flexible standups shall be provided around the lap belt anchor points to project the lap belt upward 5 inches. Troop seat load factors shall be as follows:

Aircraft Flight Path	Dynamic Load Factor in Direction of Impact
Vertical (Down)	13 g ULT
Lateral (90°)	12 g ULT
Forward with 30° Yaw	14 g ULT
Vertical (Down) with 30° Nose Down and 10° Roll	12 g ULT

TR 71–22 shall be used as a guide for the strength and energy absorbing requirements, and vertical dynamic tests shall result in dynamic pulses within the acceptable area of Figure 66. Cabin seats shall limit the load on a 50th percentile occupant (vertical effective occupant and seat weight = 170.6 lbs.) to a vertical L.F. of 14.5 ± 1g. Not less than 11 inches vertical stroking of the occupant CG shall be provided at the cabin seats.

Individual troop seats are 20 inches wide. Troop seat depth, measured from the front of the seat to the furthest point on the sloping back rest, is approximately 18.5 inches. The following describes seat installation (all locations refer to the station line of the forward edge of the seat pan midline):

a. Crewchief/gunner's seats – outboard facing, located at STA 282

b. Three forward–facing seats – STA 310.5

c. Three aft–facing seats – STA 350.5

d. Four forward–facing seats – STA 378.0

3.7.12.2.2 Crewchief/Gunner's Troop Seat Construction. The crewchief/gunner's seats shall meet the troop seat strength and energy absorption requirements specified in 3.7.12.2.1 herein.

3.7.12.2.3 Medical Evacuation Kit Accommodations. Complete provisions shall be made for the installation of an Aeromedical Evacuation Kit (see 3.7.16.9). When installed, the weight of the Medical Evacuation Kit shall be included in Useful Load.

3.7.12.3 Thermal and Acoustical Insulation. Contractor designed soundproofing blankets shall be provided. Internal acoustical noise levels shall be as specified in 3.2.12 herein.

3.7.13 Environmental Control System.

3.7.13.1 Environmental Control System (ECS). The ECS shall provide for the heating and ventilating of the crew stations and troop compartment as specified herein.

3.7.13.1.1 Heating. The heating subsystem shall be capable of providing a temperature within the cockpit of +15°F when the outside ambient temperature is −65°F. The above heating requirements shall be met in flight within one minute after takeoff, and on the ground at idle rpm within five minutes of engine start with all windows and doors closed. The maximum selectable outlet air temperature for crew station/troop compartment heating shall be 205°F. The single malfunction inlet temperature shall be 230°F.

3.7.13.1.2 Ventilation. Ventilation air shall be distributed uniformly over each crewstation and the airflow shall be controllable. A blower system shall distribute air uniformly over each crewmember from zero to a maximum airflow within a range of 300-to-800 linear fpm while the aircraft is flying at maximum endurance speed. Ventilation of the passenger/cargo compartment shall provide complete exchange of air each minute with windows and doors closed. All crew station/troop compartment air sources shall be outside the aircraft.

Space, weight, and power provisions for a ventilating system which is capable of providing filtered outside air shall be incorporated.

3.7.13.2 Anti–icing/De–icing

3.7.13.2.1 Design Criteria. For the water content and droplet size (random distribution) specified below, the aircraft shall be able to autorotate and sustain flight for the duration of its fuel supply in condition of mode rate icing intensity (Reference 6.3.5).

	Droplet Size	
Cloud Type*	Minimum	Maximum
Stratus	5 Micron	60 Micron
Stratocumulus	10 Micron	120 Micron
Nimbostratus	15 Micron	150 Micron

* With moisture content of .50 to 1.0 gm/m3.

3.7.13.2.2 Anti–icing/De–icing of Non–Transparent Areas. Main and tail rotor blade de–icing shall be provided. Electrical power shall be provided to main and tail rotors by a de–ice control system.

A Main Rotor Droop Stop Anti–Icing System shall be provided. The heaters shall be electrically powered by the blade de–ice electrical system.

3.7.13.2.3 Anti–Icing, Defrosting/Defogging of Transparent Areas. Electrothermal anti–icing and defrosting shall be provided for all three windshield panels. Defrosting and defogging shall be provided for the crewchief/gunner and gunners station windows, overhead windows, chin bubble windows and pilot/copilot door windows.

3.7.13.2.4 Engine Anti–icing. Engine anti–icing shall be as specified in 3.7.5.4.1 herein.

3.7.13.2.5 Controls. Controls for operating defrosting, defogging and anti–icing equipment shall be accessible to the pilot and copilot.

3.7.13.3 Air Conditioning. Space provisions shall be made for air conditioning the crew station.

3.7.14 Load and Handling Group

3.7.14.1 Aircraft Handling

3.7.14.1.1 Towing Provisions. Ground towing provisions shall be installed. Ground towing provisions shall permit towing under field conditions of California Bearing Ratio (CBR) 2.5. The tail landing gear shall be designed for the attachment of combination steering and tow bar (see 3.7.17.5 herein).

3.7.14.1.2 Jacking Provisions. Provisions for jacking shall installed. Jack points for wheels shall accommodate a jack 6–1/4 inches high with tires flat. Fuselage jacking shall be located as follows: two forward at station 247 butt line 46.0 and one aft at station 605 butt line 0.

3.7.14.1.3 Tiedown and Mooring Provisions. Tiedown and mooring provisions shall be installed. Ground windloads for mooring shall be 70 knots, and limit factors shall be the following (separately applied) for enroute restraint during sealift:

a. Longitudinal 4g FWD/1.5g AFT

b. Vertical
   Up 0.0g
   Down 1.7g

c. Lateral ±1.5g

Fuselage tiedown fitting shall be provided on each side of the aircraft at fuselage stations 308 and 485; a blade restrainer set shall be provided as ground support equipment.

3.7.14.1.4 Hoisting Provisions. Standard lifting provisions, integral with the aircraft, shall be made for the attachment of slings to permit aircraft hoisting and transport of the aircraft. Provisions shall also be made for the hoisting of major components including rotor hub, engines and transmissions. A universal component handling sling (3.7.17.2 herein) shall also be provided. In the hoisting provisions, a limit–load factor of 3.2 shall apply for hoisting and transport of the aircraft at the basic structural design gross weight minus crew and payload. Mounting provisions shall also be made for a maintenance crane for lifting the transmission and engines (see 3.7.17.1 herein).

3.7.14.1.5 Leveling Provisions. Provisions for measuring and leveling the aircraft for weighing and structural alignment shall be made. Leveling shall be accomplished when the aircraft is on the three–point fuselage jacks (for fuselage jacking points refer to 3.7.14.1.2 herein). A standard plumb bob shall be suspended from a leveling bracket located approximately at aircraft Station 309.6 and butt line 35.0. Leveling shall be achieved by adjusting the fuselage jacks until the plumb bob intersects the register lines on a target plate mounted near the left cabin doorway.

3.7.14.1.6 Integral Work Platform. (See 3.7.5.9.5 herein)

3.7.14.2 Cargo Handling Provisions

3.7.14.2.1 Tiedown Fittings. Cargo tiedown fittings and rings shall be provided. Sidewall tiedown rings shall be provided and shall be located in approximately the same lateral plane with the floor tiedown fittings.

3.7.14.2.2 Cargo Hook. A cargo hook and controls shall be provided to facilitate acquisition, transport and release of loads up to 9,000 pounds. The weight of the cargo hook shall be considered Useful Load when carried. The external cargo hook and its supporting structure shall withstand the load imposed by a 9,000 pound external cargo acting through a cone of action with a half-angle of 30 degrees and a limit-load factor of 2.22 at the hardpoints. The hook shall be capable of withstanding a design limit load (static) of 20,000 pounds with no yield or damage to working parts, and a design ultimate load (static) of 30,000 pounds. The hook shall accommodate load attachment with nylon straps having a 1-3/4-inch wide x 1.5-inch thick cross section or a steel clevis of 1.5 inches diameter cross section. A viewing hatch approximately 18 inches wide by 11 inches long, having a removable cover 20 inches wide by 12 inches long, shall be provided in the cabin floor over the cargo hook. The cover shall be positively retained in the closed position. Provisions shall be made for storage of cover when removed from floor.

3.7.14.2.2.1 Normal Release. The hook shall incorporate an electrical normal release mechanism. Normal release of the load shall be controlled by switches installed on the pilot and copilot cyclic controls and by a switch at a location appropriate for operation by the crewchief.

3.7.14.2.2.2 Emergency Release. The hook shall incorporate a redundant emergency release system capable of separation of applied loads of up to 11,250 pounds when released up to and including the maximum angle of 30° from the vertical in all azimuth positions. A positive electro-explosive emergency release device shall be provided for the pilot and copilot. The release shall be operated by momentary slide action switches located on the pilot and copilot collective stick grips.

3.7.14.2.2.3 Ground Release. A manual means of release shall be provided on the hook for use by the ground hookup crew. The force required to actuate the release shall not exceed 10 pounds at loads up to 100 pounds.

3.7.15 Survivability Design.

3.7.15.1 Not used.

3.7.15.2 Reduction of Detection. Complete provisions as stated in 3.7.10.22, 3.7.10.24 and 3.7.10.25 shall be made for the installation of a AN/APR-39 radar warning receiver, AN/ALQ-144( )(V) infrared jammer and M-130 chaff dispenser system to reduce detectability.

3.7.16 Mission Flexibility Kits

3.7.16.1 Rescue Hoist. An internal high performance rescue hoist will be provided as GFP. Rescue Hoist Kit, P/N 70070–30005–011, shall be provided by the Contractor. When installed, the weight of the hoist and kit shall be included as Useful Load.

3.7.16.2 Winterization Kit. The aircraft shall be capable of conversion, without airframe modification, by a winterization kit to operate within a range of ambient temperatures from −65°F to +125°F. When installed, the weight of the winterization kit shall be included in Useful Load. When the winterization kit is installed, the oil in the aircraft main, intermediate, and tail gearboxes, in the APU, in the engine starters, and in the T700 engines must remain or be changed to MIL–L–7808. Also, when the winterization kit is installed, the hydraulic fluid in each of the three hydraulic systems must remain or be changed to MIL–H–5606 for aircraft operation within the range of ambient temperature from −65°F to −25°F. Also, JP–4 must be used when starting at temperatures below −29°F.

3.7.16.3 External Extended Range Fuel System Kit. Airframe fixed provisions shall be made for the installation of the external stores support system (ESSS) and extended range fuel system kit as described in SES–700006. When installed, the weight of the ESSS kit and tanks shall be included in Useful Load.

Gravity refueling of the tanks shall be provided through the gravity filler cap on each tank. Defueling shall be accomplished by the extended range kit fuel dump system, or by transferring fuel from the extended range tanks to the main tanks via the kit supplied fuel transfer pumps, and subsequent defueling as specified in 3.7.5.7.11 herein. The fuel dump system capability shall allow defueling the entire extended range kit fuel load within 10 minutes.

The fuel control panel, which shall be mounted on the lower console for operation by both the pilot and copilot and to be visible to the pilot and copilot, shall include a digital readout of the total auxiliary fuel plus the capability to determine the fuel in each auxiliary tank, individual controls for transferring fuel from each or both tanks to the main tanks, automatic or manual backup control modes, a fuel dump switch, and fuel depletion lights.

3.7.16.4 Blackout Devices Kit. Complete provisions shall be made for the installation of a Blackout Devices Kit. The blackout devices kit shall be designed for installation over the troop/ cargo compartment windows and between the troop/cargo compartment and pilot/copilot areas. When installed, the weight of the Blackout Devices Kit shall be included in Useful Load.

3.7.16.5 External Electric Rescue Hoist Kit. Complete provisions shall be made for the installation of an External Electric Rescue Hoist and a Rescue Hoist Search Light in aircraft S/N 97–26738 through S/N 97–26743 and S/N 98–26820 through S/N 98–26822. The hoist shall be controlled by the hoist operator using a pendant which shall permit the operator to control cable direction and speed, and to perform emergency cable cut with a guard switch using electro–explosives. The pendant shall have controls for operating a dual mode searchlight dedicated for hoist operation. The pendant shall be night vision compatible. The hoist shall have a redundant fail–safe automatic control to decelerate and stop the cable at the upper and lower limits of cable travel. The hoist shall be mounted in the roof area on the right side of the aircraft near the center of the cabin door. When installed, the weight of the hoist kit and searchlight shall be included in Useful Load.

3.7.16.6 Hoist Cable Deflector Kit. Complete provisions shall be made for the installation of a hoist cable deflector kit in aircraft S/N 97–26738 through S/N 97–26743 and S/N 98–26820 through S/N 98–26822. The hoist cable deflector kit shall be designed to be installed externally just below the right hand cabin door sill and to extend along the sill from the forward to the aft door frames, protruding outboard, in order to prevent cable contact with the sill. When installed, the weight of the hoist cable deflector kit shall be included in Useful Load.

3.7.16.7 Component Handling Adapter. See paragraph 3.7.17.4.

3.7.16.8 Hoisting Sling. See paragraph 3.7.17.2.

3.7.16.9 Aeromedical Evacuation Kit. The Aeromedical Evacuation Kit shall provide a litter mission capability in two configurations: a four man configuration, and a six man configuration. Patients can be loaded laterally, tilted up (upper litter supports only), secured, supported, transported longitudinally, and unloaded laterally. The litters shall be cantilevered in two layers from both sides on a pedestal mounted vertically in mid–cabin and rotatable through 90 degrees right and 60 degrees left of the forward center line, with positive lock positions at 60 degrees left, 0 degrees, 60 degrees and 90 degrees right. A pivot fitting at the base of the pedestal attaches to a floor mounted plate which shall react vertical, torsional and shear loads through existing hardpoints in the fuselage. The top of the pedestal is restrained against longitudinal and lateral loads. When installed, the weight of the Aeromedical Evacuation Kit shall be included in Useful Load. The installation shall permit a 95th percentile medical attendant access and work space for the entire length of all litter patients. Means shall be provided for stowing the litter supports. The litter kit pedestal shall be provided with hardware which allows the upper litter supports to be positioned for a six man ambulatory configuration. When in this position, the litter supports will allow three 90th percentile ambulatory patients to be seated side by side. Seat belts shall be provided for the six ambulatory patients. Crashworthiness factors, 3.7.3.1.4.2.1 shall apply only to a single prone patient per litter. A light shall be provided near each end of each litter position (8 total). Four intravenous fluid hooks shall be provided near each end of the pedestal (8 total). The kit shall include an electrical power converter required to provide standard power requirements for medical apparatus.

As part of the medevac kit, structural hardware shall be provided for three aft–facing (troop) seats which will be located directly behind the pilot and copilot.

3.7.16.9.1 Four Man Configuration. In the four man configuration, the upper litter supports shall allow the upper litters to be tilted. A manually operated system shall be provided to tilt the upper pair of litters. Mechanical locks and pivoting controls shall be provided at each end of the upper litter supports. When litters are installed and the upper litters are pivoted up to the lock position, there shall be between the lower and upper litters a nominal 18 inches vertical separation, defined as the distance from the centerline of the lower litter poles to the underside of the upper litter support, excluding local pivot supporting structure and based on nominal dimensions for a MIL–L–16462 litter, and there shall be between the ceiling structure (WL 261.0) and the centerline of the upper litter pole a nominal distance of 22 inches based on a MIL–L–16462 litter. The design of the installation shall enable loading of four litters in two minutes or less, and two litters in 45 seconds or less.

3.7.16.9.2 Six Man Configuration. When the six man litter configuration is installed, the four man configuration upper litters shall be repositioned approximately nine inches higher, and the lower litters shall be repositioned approximately fourteen inches higher. The two additional litters for the six man configuration shall be positioned on the cabin floor and secured to the existing cargo tiedown fittings with restraint hardware. Mechanical locks and pivoting controls shall be provided at each end of the upper litter supports.

3.7.16.10 Air Transportability Kit. See paragraph 3.7.17.7.

3.7.17 Ground Support Equipment. All PGSE used at the organizational or direct support levels shall be capable for unrestricted transport by aircraft, rail, truck, ship, or by helicopter as an external load. The PGSE shall be capable of withstanding shock and vibration loads specified in TB 55–100. PGSE shall be designed to withstand the environmental conditions as specified in AR 70–38. PGSE for the aircraft shall be as further described herein. Unless specifically stated herein, the quantities of PGSE to be supplied shall be as specified in the contract.

3.7.17.1 Maintenance Crane. An aircraft mounted crane, shall be used for removal of the main rotor head, main gearbox, main transmission modules, main rotor blades, auxiliary power unit, engines, and HIRSS.

The maintenance crane assembly shall consist of five subassemblies, each of which can be handled by one man. In use, the maintenance crane shall be assembled and mounted on the aircraft at either of the two troop/cargo compartment entrances. Mounting shall not require disassembly of aircraft structure. It shall be manually operated. The crane shall permit transfer of components from their installed location to an Army standard maintenance trailer – Rail Type (Saginaw, P/N 22142), – NSN 1730–00–435–7818 – without physical interference with any portion of the aircraft. The crane shall be mounted so that all hoisting and transferring operations can be accomplished without overturning the remaining aircraft. Locks to prevent collapse of the landing gear struts and jacks shall not be required. The crane shall be capable of being mounted on the aircraft by no more than two men without the use of special tools. A container or device to secure all components of the maintenance crane for transport shall be provided. The design of the crane shall include a safety factor of 3 based on yield strength and a proof load of 200 percent. The design rated capacity shall be 1500 pounds with the load applied at the hook assembly in any direction within a cone of 11 degrees as measured from a vertical axis to the line of action of the applied load. With the aircraft on an 11 degree slope in any direction, the rated capacity shall have the above factor of safety with the load vertical. The design limit load of the maintenance crane support structure shall be 3,000 pounds with the load applied at the hook assembly in any direction within a cone of 11 degrees as measured from the vertical axis to the line of action of the applied load.

3.7.17.2 Aircraft Hoisting Sling. The polyester roundslings and other hardware listed on ATCOM Drawing No. 1670–EG–140, Helicopter Recovery Kit, shall be used for hoisting and aerial recovery of the aircraft at its basic structural design gross weight (See 3.7.14.1.4) and for loading and off–loading the aircraft from a ship or truck. The primary means of aerial recovery shall be by attachment to the main rotor hub, with a basket connection at the canted hinge bulkhead. The Army standard aerial recovery kit shall be used as an alternate bellyband method of recovery of aircraft with structural damage that preclude use of other methods.

3.7.17.3 Component Hoisting Sling. A universal component handling sling shall be used with the aircraft mounted maintenance crane or a ground crane to remove/install the following aircraft components: main rotor head, main gearbox, main transmission modules, main rotor blades, APU, bifilar, tail gearbox, oil cooler and tail rotor. A blade clamp shall also be provided as part of the universal component handling sling to assist in removal/installation of main rotor blades. Government loaned General Electric sling shall be used to lift the engines.

The universal component handling sling shall consist of four nylon webbing legs with hook and keeper assemblies at each leg end. A cargo buckle shall be provided on each leg to permit adjustment capability, leg tension equalization, and level placement of all components.

3.7.17.4 Component Handling Adapters. Adapters shall be used to permit transportation of all dynamic aircraft components on a standard 48–inch rail system maintenance trailer P/N NSN 1730–00–435–7818.

3.7.17.5 Steering and Tow Bar. The Army steering and tow bar furnished by the procuring activity shall be utilized for steering and towing.

3.7.17.6 Air Duct Plugs and Covers. Government furnished plugs or covers shall be provided as flyaway equipment (see 3.1.4 herein) for engine inlet, APU exhaust, oil cooler exhaust, and pitot tubes to prevent the entry of sand, dust, water, and snow. Contractor furnished plugs shall be provided as flyaway equipment for HIRSS cooling air inlet and HIRSS exhaust to prevent the entry of sand, dust, water and snow. The plug and cover attachments shall keep the plugs and covers in place during conditions of high wind velocities (70 knots) and extended periods of high and low frequency vibration. The airduct plugs shall be painted with red, high visibility paint.

3.7.17.7 Air Transport Kit. The Air Transportability Kit shall permit air transport of the UH–60L in the C–141B and C–5A aircraft in accordance with paragraphs 3.2.1.3.1 and 3.2.6 herein. The kit shall consist of an air transport set and an air transport loading set.

3.7.17.8 Ground Servicing Equipment. Servicing of the aircraft shall be accomplished with existing U.S. Army servicing equipment. PGSE shall not be required.

3.7.17.9 Ground Test Equipment. The APU Line Test Set which shall have a continuous operating temperature range of −25°C to +55°C. All flightline test equipment shall be capable of being powered by an onboard power source.

3.8 Precedence. The contract shall have precedence over this specification. This specification shall have precedence over the referenced documents of Section 2.

4. Not used.

5. Not used.

6. NOTES

6.1 Not used.

6.2 Not used.

6.3 Definitions

6.3.1 Design Limit Speed. V_{DL} is the speed V_H multiplied by a factor k. The factor k is 1.20 for the UH–60L.

6.3.1.1 V Limit Auto. V limit auto is the maximum airspeed for stabilized autorotation and may not be less than the smaller of V_H or 1.2 times the speed for maximum glide distance.

6.3.2 Design Maximum Level Flight Speed. V_H is the maximum equivalent level flight speed at all altitudes on a standard day in forward, rearward, and sideward flight at each gross weight using intermediate power or transmission limit power, whichever is less.

6.3.3 Intermediate Power. Intermediate power is the highest power which the engine will consistently deliver at specific ground or flight conditions for an incremental duration of at least 30 minutes and a total duration as specified in the engine specification for demonstration during qualification tests or preliminary flight.

6.3.3.1 Maximum Rated Power. Maximum rated power is the highest power which the engine will consistently deliver at specific ground or flight conditions for an incremental duration of at least 10 minutes and a total duration as specified in the engine specification for demonstration during qualification testing or preliminary flight.

6.3.4 Maximum Continuous Power. Maximum continuous power is the highest power which the engine will consistently deliver at specific ground or flight conditions for continuous operation for at least the durations (incremental and/or total) specified in the engine PIDS for demonstration during qualification testing and preliminary flight rating testing.

6.3.5 Moderate Icing Intensity. Liquid Water Content greater than 0.5 gm/cubic meter and less than 1.0 gm/cubic meter.

6.3.6 Moderate Turbulence. As defined by Figure 40, Turbulence Criteria Table, Aviation Weather for Pilots and Flight Operations Personnel, Federal Aviation Agency Flight Standards Service, Department of Commerce Weather Bureau, 1965.

6.3.7 Space, Weight, Power and Structural Provisions

6.3.7.1 Space Provision. Space provision for a specific installation means that only space is allocated for the installation and that brackets, bolt holes, electrical wiring and hydraulic lines are not installed. Space provision does not imply that adequate attaching structure is provided, unless otherwise stated. The weight of the specific installation is not included in "weight empty" unless specifically stated otherwise.

6.3.7.2 Weight Provisions. This term means that suitable weight allowance for later incorporation of the item or complete installation is included in the applicable empty weight of the vehicle for structural design conditions involved. The item of equipment, assembly, or installation is included in "weight empty" unless stated otherwise.

6.3.7.3 Power Provisions. Power provisions for a specific installation means that the primary electrical/hydraulic/pneumatic power and distribution system is of sufficient capacity to permit later incorporation of the specific equipment without modification of the primary power and distribution system. This capacity is in addition to the excess capability provided for growth in the load demand. "Power provisions for" does not include electrical wiring, hydraulic or pneumatic lines, brackets, bolt holes, etc. The weight of the specific installation is not included in "weight empty" unless specifically stated otherwise.

6.3.7.4 Structural Provisions For. Structural provisions for a specific installation shall mean that the primary structure will be structurally adequate for the installation, but that brackets, bolt holes, electrical wiring, hydraulic lines, etc., will not be required. The weight of the specific installation shall not be included in "weight empty" unless specifically stated otherwise.

6.3.8 Complete Provisions. Complete provisions or provisions shall be made for a specific item of equipment or assembly or installation means that all supports, brackets, tubes and fittings, electrical wiring, hydraulic lines, etc., are installed, and adequate weight and space are allocated in order that equipment can be inserted without alteration to the specified equipment or the vehicle, and that no additional parts are required for insertion, other than the item itself. Avionics equipment shall be capable of being quickly installed. The installation will be fully tested during the development phase to demonstrate that specified performance is achieved. The item of equipment, assembly, or installation is included in the "weight empty" unless it is specifically indicated that the item is to be "Useful Load" or "special equipment."

6.3.8.1 Fixed Provisions. Fixed Provisions for a specific installation shall be defined as that portion(s) of a system which is provided as part of the basic aircraft but to which must be added a kit installation before the system can be made operational. The weight of fixed provisions is included in Weight Empty.

6.3.9 Source Radiation. The unattenuated infrared radiation emanating from the engine, engine exhaust system, and all other surfaces at a temperature above ambient.

6.3.10 Total Source Radiation. All source radiation emanating from the aircraft that will increase the detection range or radiate energy sensed by Army Aircraft heat seeking threats.

6.3.11 Absolute Radiation. The calculated or unattenuated measured source radiation.

6.4 Miscellaneous Notes

6.4.1 Electronic equipment nomenclature followed by symbol ( ) indicate that any model of the equipment is physically interchangeable and is acceptable, i.e., RT-294( ), RT-294A, etc.

APPENDIX I

TO

AIRCRAFT SPECIFICATION

FOR UH–60L BLACK HAWK HELICOPTER,

FLYING AND GROUND HANDLING QUALITIES SPECIFICATION

APPENDIX I

10.0 FLYING AND GROUND HANDLING QUALITIES SPECIFICATION

10.1 Scope. This specification contains the requirements for the flying and ground handling qualities of the aircraft.

10.2 Not used.

10.3 Requirements

10.3.1 General

10.3.1.1 Criteria. In the event that quantitative flying and ground handling qualities data are outside the limits set forth herein, but the particular characteristic had been found acceptable during U.S. Government airworthiness evaluation, the requirements of the paragraph shall be considered as met.

10.3.1.2 Helicopter Loadings. Unless otherwise stated, the requirements of this section apply to all loadings up to 20,250 pounds with neutral lateral center of gravity approved for service use. For loadings above 20,250 pounds, this specification is to be used only as a guide to define desirable characteristics. Within the limits defined, these service loadings include the most adverse combinations of gross weights, longitudinal center of gravity, internal load, fuel state, external equipment or stores and sling loads (when appropriate).

10.3.1.3 Altitudes. The requirements shall apply to all altitudes that are approved for service use. Low altitude shall be between sea level and 5,000 feet density altitude.

10.3.1.3.1 Mid Altitude. The mid altitude shall be 10,000 feet density altitude, except that where ground reference is required a range of 8,000 to 10,000 feet is allowed.

10.3.1.3.2 High Altitude. The high altitude shall be at least 17,000 feet density altitude.

10.3.1.4 Flight Envelopes. These envelopes shall serve to define the boundaries within which the aircraft is expected to be operational and within which the requirements of this specification therefore apply subject to paragraph 10.3.1.2. The limiting boundaries of these envelopes shall be compatible with the flying qualities requirements of this specification and shall be clearly defined.

10.3.1.4.1 Normal Acceleration – Airspeed. The aerodynamic design envelope for the aircraft shall be that shown in Figures 29 and 30 of this specification.

10.3.1.4.2 Sideslip Limits. For the low, mid, and high altitudes defined in 10.3.1.3, sideslip–airspeed limitations shall not exceed the requirements stated in 10.3.4.1.7. The sideslip envelope is presented in Figure 28a of 3.2.1.1.1.4.

10.3.1.5 Operation of Doors and Hatches. The speed limitations with doors and/or hatches (which are intended to be opened or removed during normal flight operation) open or removed shall be as defined by 3.2.2.4.1.9 of this specification.

10.3.1.6 Emergency Release of Stores

10.3.1.6.1 Within the limits of the published stores jettison envelope, positive separation shall occur in unaccelerated level flight and in descents and shall result in a steadily increasing distance of the store from all components of the aircraft (i.e., the configuration of the store rack and basic airframe shall be such that the store does not pass closer to the basic airframe than the initial clearance at the instant of release during the normal separation trajectory.)

10.3.1.6.2 These requirements shall be met for inadvertent releases.

10.3.1.6.3 There shall not be an increase in normal acceleration, following release of stores, greater than 10% of the positive limit load factor.

10.3.2 Mechanical Characteristics of Control System

10.3.2.1 Control System Breakout and Friction Force

10.3.2.1.1 Aircraft control systems shall have breakout forces, including friction, which meet the requirements of Table I–I when measured in flight.

TABLE I–I

Limit Control Forces for Breakout Including Friction With Adjustable Friction Devices Set for Minimum Friction

Control	Minimum–lb	Maximum–lb
Longitudinal Cyclic	0.5	2.6
Lateral Cyclic	0.5	2.2
Collective	*1.0	5.0
Directional	3.0	7.0

* May be measured with adjustable friction set.

10.3.2.1.2 The breakout forces shall be symmetrical for each control with a maximum tolerance of 10%, e.g., if forward longitudinal control breakout force were 1.0 lb., then allowable aft longitudinal breakout force would be in the range between 1.1 lb. and .9 lb.

10.3.2.1.3 For emergency manual operation upon single failure of a power–operated or power–boosted control subsystem, the allowable breakout forces specified in Table I–I shall be doubled.

10.3.2.2 Control Subsystem Force Gradients. The aircraft shall have positive control centering characteristics in flight for the longitudinal, lateral and directional control subsystems, and force vs displacement gradients in accordance with Table I–II.

TABLE I–II

CONTROL FORCE VS DISPLACEMENT GRADIENTS

Control	Minimum	Maximum
Longitudinal Cyclic	0.4 lbs/in.	3.0 lbs/in.
Lateral Cyclic	0.3 lbs/in.	0.9 lbs/in.
Directional	4.5 lbs/in.	9.0 lbs/in.

10.3.2.2.1 The slope of the curve of force versus displacement shall be positive at all times with the slope for the first inch of travel from trim equal to or greater than the slope for the remaining control travel.

10.3.2.3 Adjustable Control. The pedal control characteristics shall not differ by more than 10 percent from the value at the median position when pedals are adjusted over the range available for adjustment to pilot physical dimensions.

10.3.2.4 Rate of Control Displacement. It shall be possible upon failure of any parallel actuator to override the actuator and maintain control. The forces required to override the actuator shall not be greater than 25 lbs. longitudinally, 12 lbs. laterally, 95 lbs. directionally, and 40 lbs. for the collective control.

10.3.2.5 Trim. The aircraft shall incorporate provisions to trim cyclic and directional control forces to zero over the trim flight conditions and speed ranges specified in Table I–III. All trim devices shall maintain indefinitely the zero force position setting selected by the pilot. Following a trim system malfunction of any type, for all flight conditions, the permanent out–of– trim forces shall not exceed 20 pounds longitudinally, 10 pounds laterally and 50 pounds directionally. A trim failure shall not result in any restricted control travel.

TABLE I–III
POWER AND SPEED CONDITIONS

Altitudes	Initial Trim & Power Condition	Speed Range of Interest
Low	Hovering	0 to 35 knots in any direction
Low	Level flight at 35 kts	15 to 60 knots
Low, High	Level flight at speed for maximum specific range	$.5V_{max}$ range to 1.15 V_{max} range
Low, High	Level flight at V_H	.90 VH to 1.10 VH
Low, High	Climb at speed for best rate of climb with intermediate power.	V_{max} R/C ±15 knots
Low, High	Climb at .85 VH at intermediate power.	.85 V_H ±15 knots
Low, High	Trim at speed for maximum specific range, diving flight at flight idle power, intermediate power and maximum continuous power.	all speeds normally attained in dives with the configuration
Low, High	Trim at speed for max. range, partial power decents at 25% 50% and 75% of full autorotation R/D at the same speeds.	V_{min}. R/D in auto–rotation –20 knots to V_{limit} for autorotation
Low, High	Partial power descents at 300 to 500 fpm at speeds for best rate of climb.	30 to 120 knots
Low, High	Autorotation with trim as set for level flight for speed for maximum range.	V_{min}. R/D –20 knots to V_{limit} for autorotation
Low, High	Autorotation at Vmin. R/D, V_{max}. specific range and V_{max}. for autorotation	all speeds normally attained in auto–rotation with the configuration

10.3.2.6 Power–Operated Controls. The aircraft shall meet the following conditions with respect to power–operated controls.

10.3.2.6.1 In trimmed forward level flight at any speed above 80 knots, out–of–trim conditions resulting from a failure of a single power–operated control system shall be such that:

(a) With controls free for at least 3 seconds, the resulting rate of yaw, roll, and pitch shall not exceed 10 degrees per second, and the change in normal acceleration shall not exceed ±1/2 g.

(b) It shall be possible to continue level flight with zero sideslip with forces to operate the controls not exceeding 50 pounds for the directional control, 20 pounds for the collective and longitudinal controls, and 10 pounds for the lateral control.

10.3.2.6.2 With a power–operated control subsystem off, it shall be possible to trim steady longitudinal and lateral control forces to zero under all the conditions and speed ranges specified in Table I–III and directional control force to zero for 80 knots and above conditions.

10.3.2.6.3 With a power–operated control subsystem off, the collective pitch control shall not tend to creep, whether or not cyclic controls are moved.

10.3.2.6.4 With the aircraft trimmed in steady level flight at 60 knots, under single power–operated control system failure conditions, it shall be possible without retrimming to make a normal landing approach and landing with control forces not exceeding the limits given in 10.3.2.6.1(b).

10.3.2.6.5 Total engine failure or primary electrical subsystem failure, or both, shall not result in primary power– operated control subsystem failure.

10.3.2.6.6 Power–operated control subsystem failure shall not result in failure of the trim subsystems.

10.3.2.6.7 The aircraft shall have two completely independent power–operated control subsystems, configured such that the requirements of 10.3.2.6.1 shall be met upon failure of one of the complete subsystems during the period of transfer from one system to another. With the remaining subsystem, 10.3.2.6.2 shall apply and the rates of control motion attainable shall in no case be less then 75 percent of the normal rates. In such operations, including the approach and landing specified in 10.3.2.6.4, the control forces stated in 10.3.2.6.1 (b) shall be considered an absolute maximum.

10.3.2.7 Automatic Stabilization. Automatic stabilization and stability augmentation equipment shall be employed to meet all the requirements of section 10.3. For this equipment, the following conditions shall be met:

10.3.2.7.1 With the automatic stabilization and stability augmentation equipment engaged, and from steady level flight for a period greater than 30 seconds, out–of–trim conditions resulting from disengagement or from single failure of the equipment to a hardover position in a single axis shall be such that with controls free for 3 seconds following the disengagement or failure, the resulting rates of yaw, roll, and pitch shall not exceed 10 degrees per second and the change in normal acceleration shall not exceed ±1/2 g. When engaging the automatic stabilization or stability augmentation equipment, there shall be no switching transients that require more than ±.25 inches of control input to maintain attitude.

10.3.2.7.2 The aircraft shall employ completely independent stability augmentation, electronic flight control (automatic stabilization), and stabilator subsystems. The requirements of 10.3.2.6.1 shall be met upon the failure of any one complete subsystem.

10.3.2.7.3 The aircraft, with all automatic stabilization and stability augmentation equipment disengaged, shall be capable of flight and landing under instrument flight rules (IFR).

10.3.2.7.4 For pitch, roll, and yaw control, an augmentation subsystem in combination with pilot controlled inputs shall not utilize more than 70 percent of the available control displacement in the unstable direction from the trim position for straight level flight at a given speed when performing the following maneuvers:.

(a) Standard rate (three degrees per second) sustained turns throughout the airspeed envelope up to the maximum speed for level flight. For that portion of this envelope where a power deficiency exists during the turn, airspeed reduction during the turns shall not extend below the speed for maximum continuous power.

(b) Steady sideslips in both powered and autorotation flight at the combinations of speeds and sideslip angles set forth in 10.3.4.1.7.

(c) Any other portion of the flight envelope.

10.3.2.8 Freeplay. For all operating conditions, there shall be no control subsystems characteristics which permit more than ±1 percent motion (of total travel) of the cockpit control without motion of the corresponding control surfaces. Following a failure in a boosted control or stability augmentation system, the freeplay shall not exceed ±3 percent of the total travel.

10.3.2.9 The requirements of 10.3.2 shall apply to both the low and high altitudes.

10.3.3 Longitudinal Characteristics.

10.3.3.1 Trimmability.

10.3.3.1.1 Control Displacement Available and Trim Capability. It shall be possible to obtain flight over a speed range from 35 knots at any azimuth to the maximum forward speeds defined in paragraph 10.3.1.4.1. This speed range shall include hovering and any other steady state flight condition, including steady climbs, steady descents, and autorotation. Throughout the specified speed ranges, the longitudinal control response margin shall be as specified in paragraph 10.3.3.4.1. This capability shall apply not only to powered flight but also to autorotative flight at forward speeds between zero and the limit speed for autorotation. The aircraft shall be reasonably steady while hovering in calm air (winds up to 3 knots), requiring a minimum movement of the cyclic controls to keep the aircraft over a given spot on the ground , for all terrain clearances up to disappearance of ground effect. It shall be possible to accomplish this with less than ± 0.25 inch movement of the cyclic controls. For the appropriate trim condition and speed range specified in Table I-III, it shall be possible to trim steady, longitudinal control forces to zero. This requirement shall apply to all loadings defined in 10.3.1.2.

10.3.3.1.1.1 During all maximum performance changes from one trim condition in Table I-III to another, it shall be possible to maintain control forces below the values of Table I-IV. Trim devices shall not be so rapid in operation as to be oversensitive or to make precise trim difficult under any flight condition. Stick "jump" shall not occur when the trim control is activated.

TABLE I-IV

Control	Limit Control Force – lb
Longitudinal Cyclic	20.0
Lateral Cyclic	10.0
Collective	20.0
Directional	50.0

10.3.3.1.1.2 While trimmed in stabilized level flight out of ground effect at maximum forward speed, it shall be possible to bring the aircraft to a quick stop and hover. With the aircraft trimmed in hovering flight, it shall be possible to accelerate rapidly, using intermediate power, to maximum forward speed, maintaining approximately constant altitude.

10.3.3.1.2 Trim and Transient Forces. It shall be possible to change from any trim and power condition in Table I-III to any other trim and power condition in Table I-III without retrimming and without exceeding the limit control forces of Table I-IV within the first 5 seconds from pilot initiation of the trim change. This requirement shall also include the quick stop and any other normal aircraft maneuvers. During and following longitudinal displacement of the control stick from trim, the force acting in a direction to resist the displacement shall not at any time decrease. There shall be no lateral or directional control forces developed.

10.3.3.1.3 Control Characteristics. For all approved aircraft configurations (including sling load operations), from any trim condition, within the c.g. envelope, an initial rearward displacement of the longitudinal control stick shall be required to obtain a speed less than the trim speed and an initial forward displacement shall be required to obtain a speed greater than the trim speed.

10.3.3.1.3.1 When starting from trim at any combination of power and airspeeds within the flight envelope, it shall be possible to maintain longitudinal trim with a longitudinal control displacement of no more than 3 inches from the initial trim position as the engine power or collective pitch, or both, are varied throughout the available range.

10.3.3.1.3.2 The aircraft shall exhibit both positive stick fixed and stick free maneuvering stability in steady turning flight and in pullups. In pullups from trimmed straight flight, during which the longitudinal control is displaced, at various rates (up to those for a step input) and held fixed for at least 1.0 second and then returned to its initial position, the ratio of maximum longitudinal stick force to peak normal acceleration shall never be less than the ratio of force to acceleration obtained in steady acceleration under the same conditions.

10.3.3.2 Longitudinal Dynamic Stability

10.3.3.2.1 Aircraft Operation. The following conditions shall be met for a single disturbance in smooth air with controls fixed.

a. Any oscillation having a period of less than 10 seconds shall damp to one–half amplitude in not more than two cycles. There shall be no tendency for undamped small oscillations to persist.

b. Any oscillation having a period greater than 10 seconds shall not achieve double amplitude in less than one cycle.

c. The dynamic oscillations of normal acceleration which occur at approximately constant speed, and which may be produced by abruptly deflecting and returning the longitudinal control to the trimmed position shall meet the requirements of Figure I–1 for all configurations and all forward flight speeds greater than the speed for minimum power required. For frequencies outside the range shown in Figure I–1, the requirements of 10.3.3.2.1a and 10.3.3.2.1b shall apply.

10.3.3.2.2 The requirements of 10.3.3.2.1 shall apply at all permissible airspeeds, rotor rpm and loadings, both in straight flight and in turns, and at high, medium and low altitude.

10.3.3.3 Longitudinal Short–Period Maneuvering Characteristics.

10.3.3.3.1 Aircraft Maneuvering Characteristics. The angular acceleration shall be in the proper direction within 0.2 seconds after longitudinal control displacement. This requirement shall apply for the trim conditions specified in Table I–III. The normal acceleration stipulations cover all speeds above that for minimum power required; the angular velocity characteristics shall apply at all speeds including hovering.

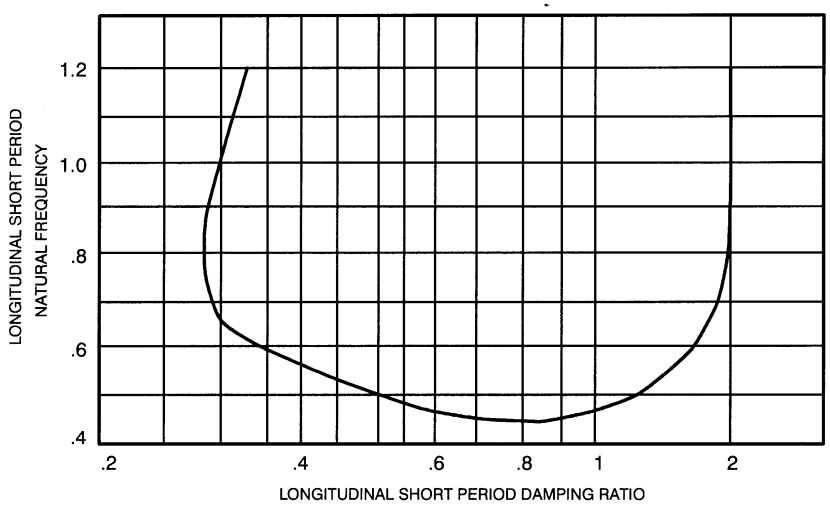

FIGURE I–1. DYNAMIC SHORT PERIOD LONGITUDINAL CHARACTERISTIC

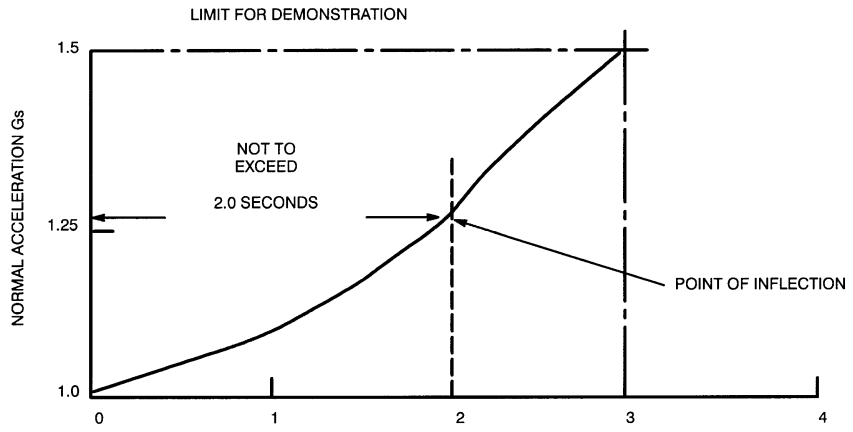

FIGURE I–2. NORMAL ACCELERATION RESPONSE

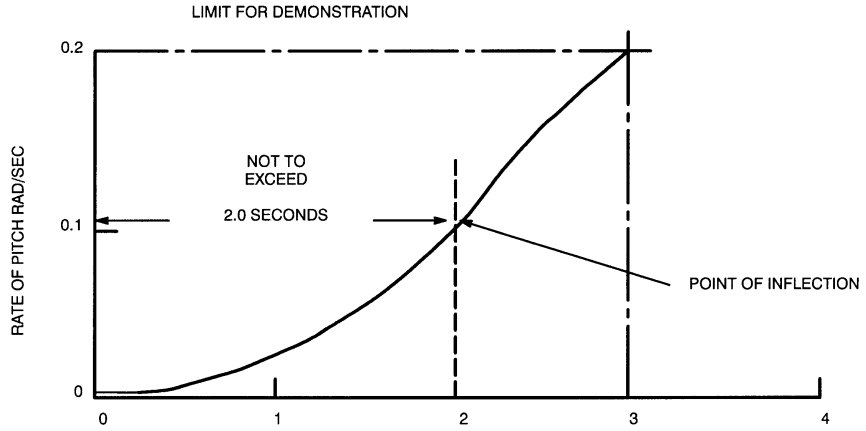

FIGURE I–3. ANGULAR VELOCITY RESPONSE

10.3.3.3.2 The aircraft operating at 16,450 pounds gross weight, 4000 feet pressure altitude, 95°F, shall be capable of independent lateral and vertical displacements of 200 feet within 1100 feet of longitudinal displacement (measured from the point of the pilot's initial control inputs) at 150 KTAS with zero wind.

10.3.3.3.3 The aircraft at 16,450 pounds gross weight, 4000 feet pressure altitude, 95°F, shall be capable of performing the following maneuver. From a level unaccelerated flight condition at 150 KTAS it shall be possible to attain, within 1.0 second from the initial control input, a sustained load factor of 1.75g's in a symmetrical pullup. Following this load factor build–up, it shall be possible to maintain a minimum load factor of 1.75g's for 3.0 seconds after the initial attainment of 1.75g's. Airspeed at the end of the 1.75g, 3.0 seconds duration segment of the maneuver shall not be less than 120 KTAS. Also, from a level unaccelerated flight condition at 150 KTAS, it shall be possible to attain, within 1.0 second from the initial control input, a sustained load factor of 0.0g's in a push–over. Following the attainment of this load factor, it shall be possible to maintain a load factor of 0.0g's for 2.0 seconds. At no time during this maneuver shall it be necessary to manipulate the collective pitch purely to maintain the aircraft structural integrity. At no time during either the pull–up or push–over maneuvers described above shall angular deviations in roll and yaw be greater than ±10 degrees from the initial unaccelerated level flight conditions.

10.3.3.3.4 After the longitudinal control stick is suddenly displaced rearward from trim a sufficient distance to generate a 0.2 radiant/sec. pitching rate within 2 seconds, or a sufficient distance to develop a normal acceleration of 1.5 g within a 3 seconds, or 1 inch, whichever is less, and then held fixed, the time–history of normal acceleration shall become concave downward within 2 seconds following the start of the maneuver, and remain concave downward until the attainment of maximum acceleration excepting the fundamental reversal that occurs prior to 2 seconds. Figure I–2 is illustrative of the normal acceleration response considered.

10.3.3.3.5 During the maneuver described in 10.3.3.3.4, the time–history of angular velocity shall become concave downward within 2.0 seconds following the start of the maneuver, and remain concave downward until the attainment of maximum angular velocity; with the exception that for this purpose, a faired curve may be drawn through any oscillations in angular velocity not in themselves objectionable to the pilot. Preferably the time–history of angular velocity shall be distinctly concave downward throughout the period between 2.0 seconds after start of the maneuver and the attainment of maximum angular velocity. Figure I–3 illustrative of the angular velocity response considered acceptable.

10.3.3.3.6 When the longitudinal control stick is suddenly displaced rearward from trim, the lesser distance of 1 inch or that determined by the 0.2 radians/sec or 1.5 g requirement above, and held for at least 0.5 second, and then returned to and held at the initial trim position, the normal acceleration shall not increase by more than 0.25g within 10 seconds from the start of the disturbance, except 0.25g may be exceeded during the period of control application. During the subsequent nosedown motion (with the controls still fixed at trim) any acceleration drop below the trim value shall not exceed 0.25g within 10 seconds after passing through the initial trim value.

10.3.3.3.7 The response of the aircraft to motion of the longitudinal control shall be such that in the maneuver described in 10.3.3.3.6, the resulting normal acceleration always increases with time until the maximum acceleration is approached, exception for decreases not perceptible to the pilot.

10.3.3.4 Longitudinal Controllability.

10.3.3.4.1 The longitudinal controllability shall be such that the response (attitude rate per unit of control displacement) and sensitivity (attitude acceleration per unit of control displacement) are essentially linear throughout the flight envelope. Additionally, at all trim conditions of Table I–III, there shall be 10–percent control margin or sufficient control power margin available to produce a pitch rate of 15 degrees/second in 1.5 seconds for all allowable loadings and at both high and low altitudes, or develop sufficient rate within 1.5 seconds which will achieve the aerodynamic design envelope of 10.3.1.4.1, whichever is least.

10.3.3.4.2 With aircraft trimmed for level flight at V_H, the longitudinal force required for dives to any allowable speed within the flight envelope of 10.3.1.4.1 shall not exceed a push force of 30 lb.

10.3.3.4.3 The longitudinal trim changes caused by the operations specified in 10.3.1.6 and 10.3.1.8 shall not be so large that peak longitudinal forces in excess of 10 lb are required when such changes are made in flight under conditions defined by the operational procedures.

10.3.3.4.4 With the aircraft trimmed in straight flight at the conditions specified in Table I–III, the longitudinal control force required to maintain constant speed in the sideslips of paragraph 10.3.4.1.7 shall not exceed 10 lbs.

10.3.4 Directional and Lateral Characteristics

10.3.4.1 Directional Control Characteristics

10.3.4.1.1 The following ground handling conditions shall be met with the cyclic control in an appropriate position for maintaining the desired taxi speed condition:.

a. It shall be possible, without the use of brakes, to maintain a straight path in any direction in a wind of 35 knots from any direction.

b. It shall be possible to make a complete turn in either direction by pivoting on either main landing gear in a wind of 35 knots from any direction.

c. During the maneuver of a and b, the directional control shall not contact the control stops under conditions of moderate turbulence.

10.3.4.1.2 From a hovering condition at 16,450 pounds gross weight, 4000 feet pressure altitude, 95°F, at a minimum height corresponding to an h/d of at least 0.4, it shall be possible to obtain any steady level flight velocity up to 35 knots in any direction, without requiring unusual control manipulation. Under these conditions, there shall be sufficient control margins to produce the rate of response of Table I–V when the appropriate control is deflected to its closest control stop. For the most unstable condition and for a wind gust condition of ±50% of the wind velocity, the normal corrections required for the gust upsets shall not result in the controls contacting the stops for time intervals greater than 0.1 second.

TABLE I–V

CONTROL RESPONSE MARGIN

Longitudinal	15 deg/sec in 1.5 seconds
Lateral	15 deg/sec in 1.5 seconds
Directional	15 deg/sec in 1.5 seconds

10.3.4.1.3 While hovering in still air (winds up to 3 knots), it shall be possible to maintain heading with ±1 inch of directional control movement.

10.3.4.1.4 The directional controllability in a hover shall be such that the response (attitude rate per unit of control displacement) and sensitivity (attitude acceleration per unit of control displacement) are essentially linear with control displacement.

10.3.4.1.5 The yaw displacement shall be less than 30 degrees in the first second following a sudden pedal displacement of 1 inch from trim while hovering at the lightest normal service loading.

10.3.4.1.6 It shall be possible to make coordinated turns in each direction while in autorotation, at all autorotation speeds.

10.3.4.1.7 The aircraft shall possess positive control–fixed, directional stability, positive sideforce characteristics and effective dihedral in both powered and autorotative flight at all forward speeds above 50 knots. At these flight conditions with zero yawing and rolling velocity, the variations of pedal displacement and force and lateral control displacement and force with steady sideslip angle shall be stable (left pedal and right stick displacement for right sideslip) up to full pedal displacement in both directions, but not necessarily beyond a sideslip angle of 15 degrees at Vmax, 30 degrees at 50 knots or beyond a sideslip angle determined by a linear variation with speed between these two angles. Between sideslip angles of ±15 degrees, the curve of pedal displacement and lateral control displacement plotted against sideslip angle shall be approximately linear. Throughout the remainder of the required sideslip range, an increase in directional control motion and force shall be required to produce an increase in sideslip. The side force characteristics shall be such that in all specified sideslips, an increase in right bank angle accompanies an increase in right sideslip and an increase in left bank angle accompanies an increase in left sideslip. In all flight conditions specified above, a margin of lateral control effectiveness (as defined in Table I–V) and a longitudinal control margin of 5 percent shall remain.

10.3.4.1.8 At the conditions specified in 10.3.4.1.7 it shall be possible to make complete turns in each direction with pedals fixed or free by use of cyclic control stick alone. At all speeds specified in 10.3.4.1.7, no reversal of rolling velocity (i.e., return through zero) shall occur after a small lateral step displacement of the control stick is made with pedals fixed. The stick deflection chosen shall be such that the maximum angle of bank reached during 6 seconds is approximately 30 degrees.

10.3.4.1.9 For all conditions and speeds specified in Table I–III, it shall be possible in steady flight to trim steady lateral and directional control forces to zero. At these trim conditions, the controls shall exhibit positive self–centering characteristics. Stick "jump" shall not occur when trim control is actuated.

10.3.4.1.10 During and following a lateral displacement of the control stick from trim or a rapid pedal displacement from trim, the force acting in a direction to resist the displacement shall not at any time decrease. Lateral control displacement shall not produce longitudinal control forces in excess of 40 percent or pedal forces in excess of 100 percent of the associated lateral force. Pedal displacement shall not produce longitudinal control forces in excess of 8 percent or lateral control forces in excess of 6 percent of the associated pedal force.

10.3.4.1.11 The aircraft shall meet the following directional control requirements for transient and maneuvering response:

The sideslip developed in a maneuver started from a laterally level condition and generated by step displacement of the lateral control of such a magnitude that a bank angle of 30 degrees is developed in not less than 6 seconds, should not exceed 5 degrees.

10.3.4.2 Lateral Control Characteristics

10.3.4.2.1 Hovering and Sideward and Rearward Flight. (Refer to 10.3.4.1.2)

10.3.4.2.2 Trimmability. (Refer to 10.3.4.1.10)

10.3.4.2.3 At all trim conditions and speeds specified in Table I–III, the force required for a 1–inch travel from trim shall not be less than the combination of breakout force (including friction) exhibited in flight and the centering gradient. The slope of the curve of stick force versus displacement shall be positive at all times and the slope for the first inch of travel from trim shall always be equal to or greater than the slope for the remaining stick travel.

10.3.4.2.4 In response to lateral or directional control displacement, the angular acceleration shall be in the proper direction within 0.2 second after control displacement. This requirement shall apply to all flight conditions, including autorotation.

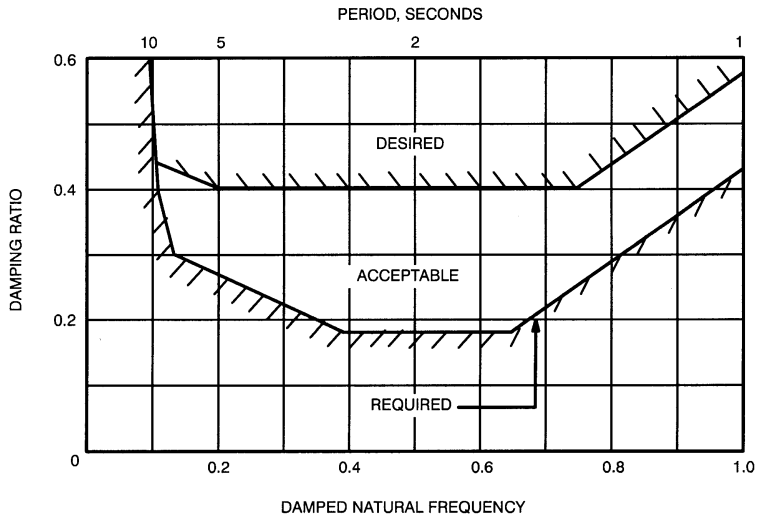

FIGURE I–4. LATERAL–DIRECTIONAL DAMPING

10.3.4.2.5 When starting from trim at any combination of power and airspeed with the flight envelope of the aircraft, it shall be possible to maintain lateral trim with control displacement from the initial trim position of no more than 2 inches as the engine power or collective pitch, or both are varied either slowly or rapidly in either direction throughout the available range.

10.3.4.2.6 The lateral controllability in a hover shall be such that the response (attitude rate per unit of control displacement) and sensitivity (attitude acceleration per unit of control displacement) are essentially linear meeting the control power margin of Table I–V for a neutral lateral center of gravity condition.

10.3.4.3 Lateral–Directional Stability. Lateral–directional oscillations with controls fixed following a single disturbance in smooth air shall exhibit minimum damping characteristics as a function of the damped natural frequency corresponding to Figure I–4. In addition, any lateral oscillation having a period greater than 10 seconds shall not achieve double amplitude in less than one cycle.

10.3.4.4 The bank angle shall not double in less than 20 seconds when controls are released in a steady 5–degree banked turn from trimmed–laterally level flight.

10.3.5 Vertical Control Characteristics

10.3.5.1 It shall be possible to maintain positive control of altitude within ±0.5 foot by use of the collective pitch control while hovering at constant rotor rpm under the conditions of 10.3.3.1.1. This shall be accomplished with less than ±1/2–inch movement of the collective stick.

10.3.5.2 The collective–pitch control shall remain fixed at all times unless moved by the pilot and shall not creep, whether or not cyclic or directional controls are moved. The maximum effort required for the collective control shall not exceed the values specified in Table I–IV. The breakout force (with minimum friction) shall be within the acceptable limits as specified in Table I–I.

10.3.5.3 Movement of the collective–pitch control shall not produce forces in the cyclic control in excess of 1 pound.

10.3.5.4 During approaches to a landing or to a hover from a forward flight condition, it shall be possible to control vertical speed to within ± 1.0 foot per second with less than +1/2 inch movement of the collective control in winds of less than 5 knots.

10.3.5.5 Vertical control response shall be such that, following a step input to the collective control, during stabilized, trimmed flight at the conditions of Table I–III, the increment of change in normal acceleration (measured at the aircraft center of gravity) shall be 63 percent of its initial peak value within 0.5 second.

10.3.5.6 The collective control system characteristics shall be such that maneuvering flight with increasing and decreasing normal accelerations (both steady state and transient) does not require collective control forces different from those required during unaccelerated level flight at the same airspeeds.

10.3.6 Autorotation

10.3.6.1 The aircraft shall be capable of entering into power–off autorotation at any speed from hover to VDL at all power settings and at any loading defined by 10.3.1.2. It shall be possible to make the transition under the conditions specified in the following subparagraphs.

10.3.6.1.1 The delay for all controls shall be the subsystem reaction time plus one second for the first engine failure (2 to 1 engine operation); one–half second for the second engine failure (1 to no engine operation); and pilot reaction time for simultaneous dual engine failures.

10.3.6.1.2 The aircraft shall be capable of sustaining single engine failures, sequential dual engine failures and simultaneous dual engine failures under the following conditions:

a. The aircraft shall be capable of sustaining a single engine failure (dual engine operation to single engine operation) at any airspeed from hover to limit airspeed at all power settings and any loading defined by paragraph 10.3.1.2.

b. The aircraft shall be capable of entering into power–off autorotational flight following failure of a second engine at any airspeed from hover to 1.10 times single engine level flight speed corresponding to intermediate rated power at all power settings and any loading defined by paragraph 10.3.1.2.

c. The aircraft shall be capable of entering into power–off autorotational flight following simultaneous failure of both engines in climbing flight at airspeed for best rate of climb at all power settings and any loading defined by paragraph 10.3.1.2.

10.3.6.2 The autorotational entry conditions of 10.3.6.1 shall not produce pitch, roll or yaw attitude changes in excess of 10 degrees except that, at speeds below that for Vmin R/D, a 20 degree yaw will be acceptable. At no time during this maneuver shall the rotor speed fall below a safe minimum transient autorotative value (as distinct from power on or steady–state autorotative values).

10.3.6.3 At speeds between V_{MCP} and V_{DL}, the autorotational entry requirements shall be met with an allowable altitude loss of no more than 50 feet.

10.3.6.4 The aircraft shall be capable of making a touchdown from steady autorotational flight, in any loading or external configuration (except while carrying a sling load), on a level paved surface, up to ground speeds of at least 35 knots, in winds of up to 3 knots in any direction and side drifts of up to 6 knots.

10.3.6.5 In autorotation, at a touchdown ground speed of 35 knots on a level paved surface, it shall be possible to bring the aircraft to a stop within 350 feet.

10.3.6.6 It shall be possible, in winds less than 3 knots at sea level standard day, at the end of stabilized autorotative descents, to make repeatedly safe, power–off autorotative landings at speeds of 35 knots or less.

10.3.7 Miscellaneous Requirements

10.3.7.1 For the loading conditions and altitude requirements specified by paragraphs 10.3.1.2 and 10.3.1.3 and following loss of the anti–torque tail rotor and tail rotor gear box in forward flight, the center of gravity shall not shift forward of the forward limit plus 25 percent of the total range and in no case shall the aircraft pitch uncontrollably. Sufficient longitudinal control shall be available to allow safe flight and landing with the tail rotor and gearbox removed.

10.3.7.1.1 The aircraft shall have sufficient directional stability at 20,250 pounds, 4000 feet pressure altitude, 95°F, to fly at the speed for minimum power required at 20,250 pounds with zero tail rotor thrust at the steady yawed condition with the tail rotor and tail rotor gearbox intact, at a sideslip angle no greater than 20 degrees and a rate of descent no greater than 80% of autorotation descent rate, with tail rotor and tail rotor gearbox intact, the aircraft shall be capable of a power–off zero tail rotor thrust landing at a touchdown speed no greater than 35 knots on a level paved surface at 20,250 pounds at the most critical density altitude through 5,000 feet without exceeding the side drift components of paragraph 10.3.6.4.

10.3.7.2 It shall be possible while on the ground to start and stop the rotor blades in winds up to at least 45 knots.

10.3.7.3 It shall be possible without the use of wheel chocks to maintain a fixed position on a level paved surface with takeoff rotor speed while power is being increased to takeoff power in winds as specified in 10.3.7.2.

10.3.7.4 It shall be possible to perform all required maneuvers, including taxiing and pivoting, without damage to rotor coning stops and without contact between the blades and any part of the structure.

10.3.7.5 The aircraft shall be capable of making landings and takeoffs.

10.3.7.5.1 It shall be possible to make vertical takeoffs and landings in steady wind up to 45 knots and winds gusting up to 45 knots.

10.3.7.5.2 From a level paved surface, it shall be possible to make running takeoffs up to ground speeds of at least 35 knots.

10.3.7.6 Following a single engine power failure, the aircraft shall be capable of being landed under zero wind, sea level, standard day conditions, with zero to 15 knots of ground speed at touchdown at 16,450 pounds gross weight. In addition, the aircraft shall be capable of being landed on a level unprepared surface at 4000 feet at 95°F at 16,450 pounds gross weight.

10.3.7.7 Additional Requirements

10.3.7.7.1 At any azimuth except the nose downhill orientation, there shall be no flying quality limitation to take off from or landing on a 12–degree slope at zero wind conditions with a neutral lateral center of gravity. Landings onto a 15–degree slope under zero wind conditions, shall be possible using full control. For the nose down–hill azimuth, there shall be no flying quality limitations to take offs from or landings on a 6–degree slope at zero wind conditions. Landing on a 12–degree slope under zero wind conditions shall be possible using full control.

APPENDIX II

DRAWINGS

Figure No.	Title	Page
1	General Arrangement	II-2
2	Inboard Profile	II-4
2A	Inboard Profile	II-6
2B	Inboard Profile	II-8
3	Air Transportability (C-141B)	II-12

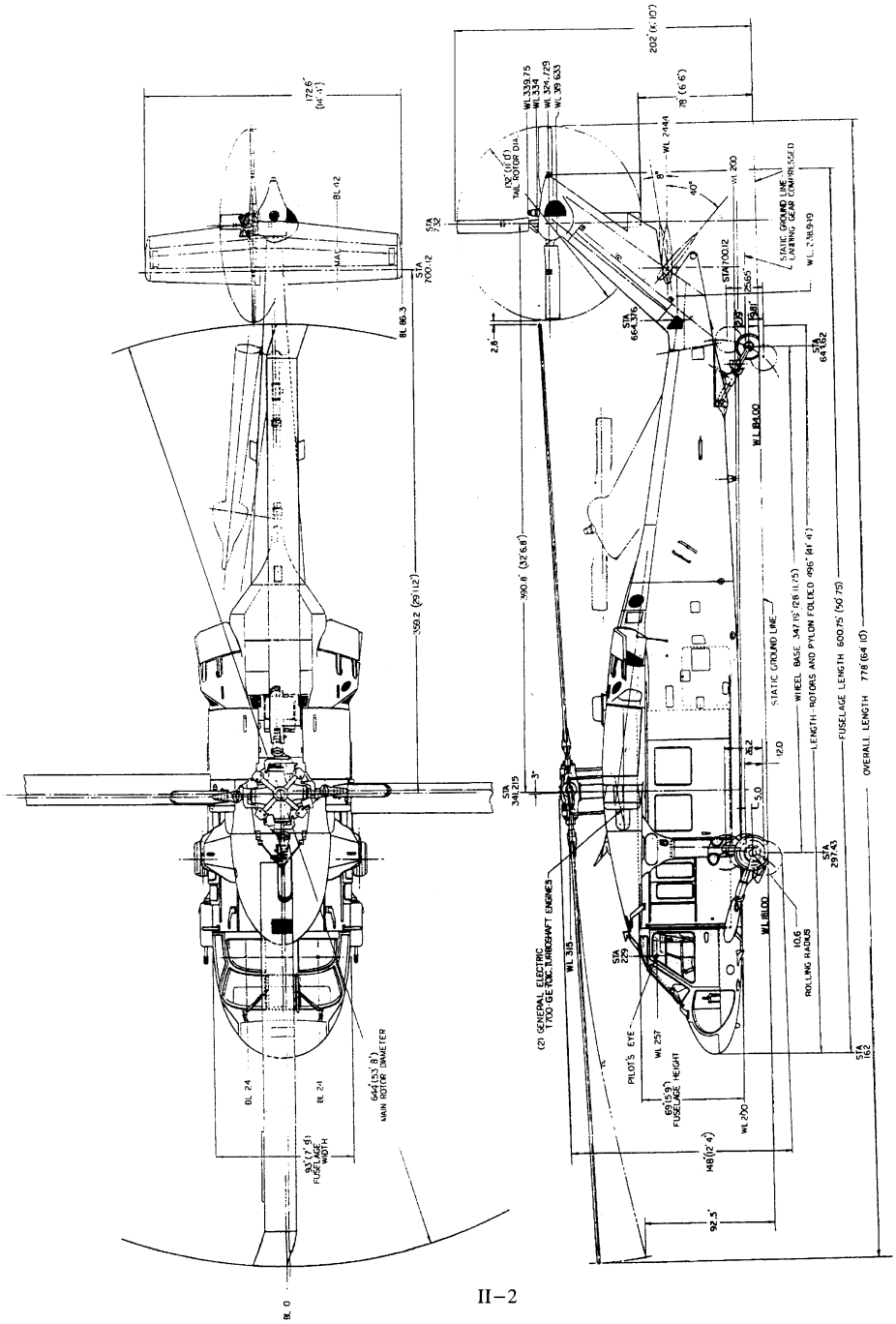

FIGURE 1. GENERAL ARRANGEMENT
(From Dwg. No. 70010−00000 Rev. E)

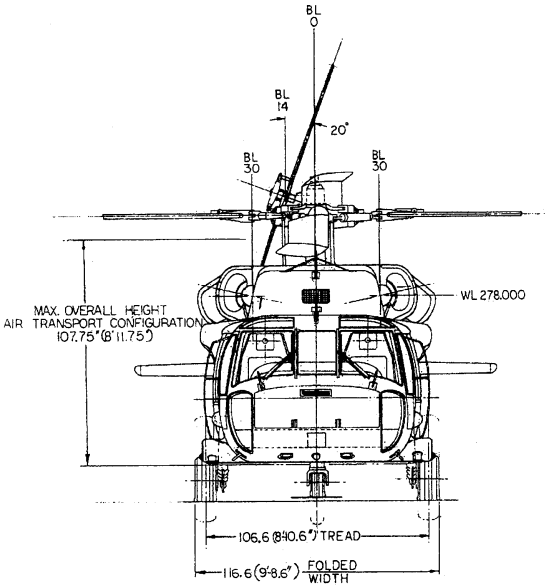

MAIN ROTOR DATA	
DIAMETER	644" (53'8")
BLADES	4
CHORD	1.73'/1.75'
AIRFOIL	SC1095/SC1095R8
BLADE AREA	186.8 SQ. FT.
SOLIDITY	.0826
TIP SWEEP	20°
TWIST	–18°
TAIL ROTOR DATA	
DIAMETER	132" (11'0")
BLADES	4
CHORD	.81 FT
AIRFOIL	SC1095
BLADE AREA	17.82 SQ. FT.
SOLIDITY	.1875
TWIST	–18°
HORIZONTAL STABILATOR DATA	
SPAN	172.6"
AREA	45 SQ. FT.
ROOT CHORD	44 IN.
TIP CHORD	30.5 IN.
SWEEP ¼ CHORD	0°
ASPECT RATIO	4.6
AIRFOIL	NACA 0014
INCIDENCE/DIHEDRAL	0°
VERTICAL STABILIZER DATA	
SPAN	98" (8'2")
AREA	323 SQ. FT.
ROOT CHORD LOWER	72 IN.
TIP CHORD LOWER	58 IN.
ROOT CHORD UPPER	45 IN.
TIP CHORD UPPER	34 IN.
SWEEP ¼ CHORD	41°
ASPECT RATIO	1.92
AIRFOIL (MOD OF)	NACA 0021 MODIFIED

LANDING GEAR DATA	MAIN	TAIL
LOCATION_STATION	297.43	644.62
_BUTTLINE	53.3	0
ROLLING RADIUS	10.6 IN.	6.1 IN.
FLAT TIRE RADIUS	7.4 IN.	4.5 IN.
OUTSIDE DIAMETER	26.00 IN.	15.57 IN.
TIRE WIDTH	10.00 IN.	6.55 IN.
TIRE SIZE	26X10.0–11	15X6.00–6

FIGURE 1. GENERAL ARRANGEMENT (CONT'D)
(From Dwg. No. 70010–00000 Rev. E)

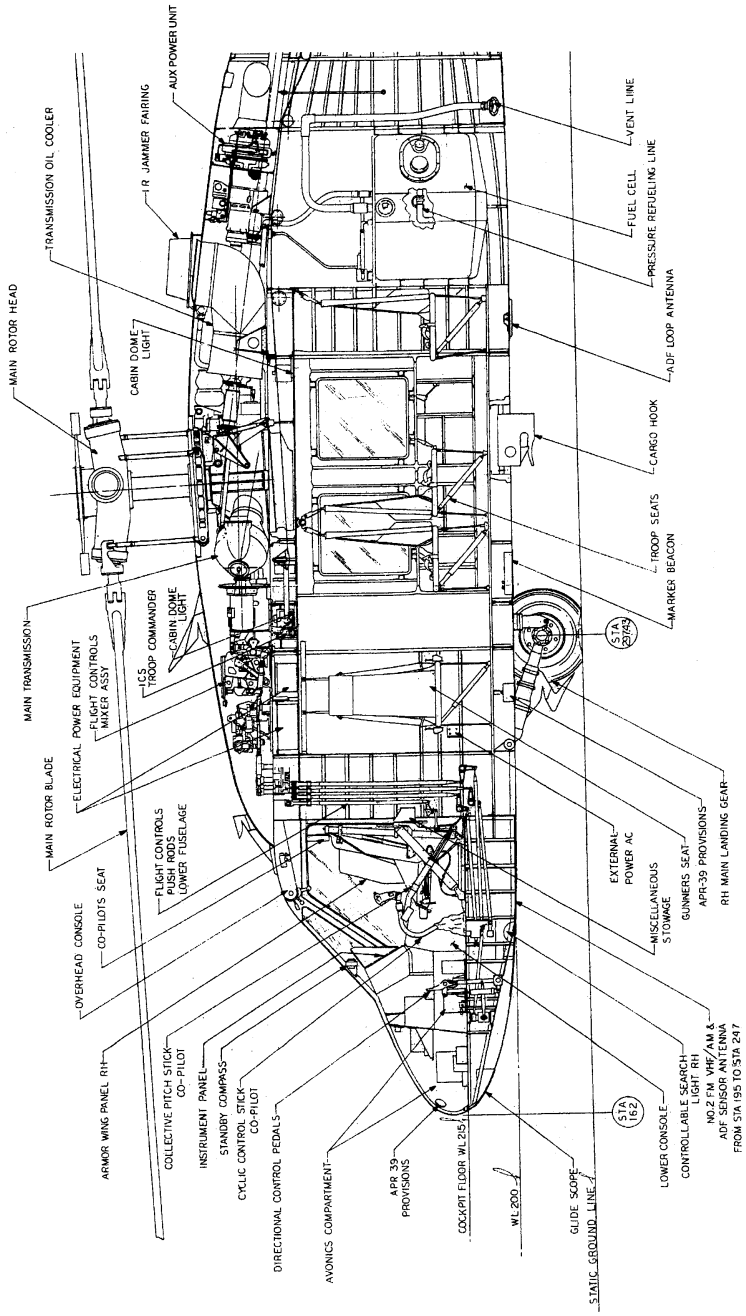

FIGURE 2. INBOARD PROFILE
(From Dwg. No. 70020–00000 Rev. A)

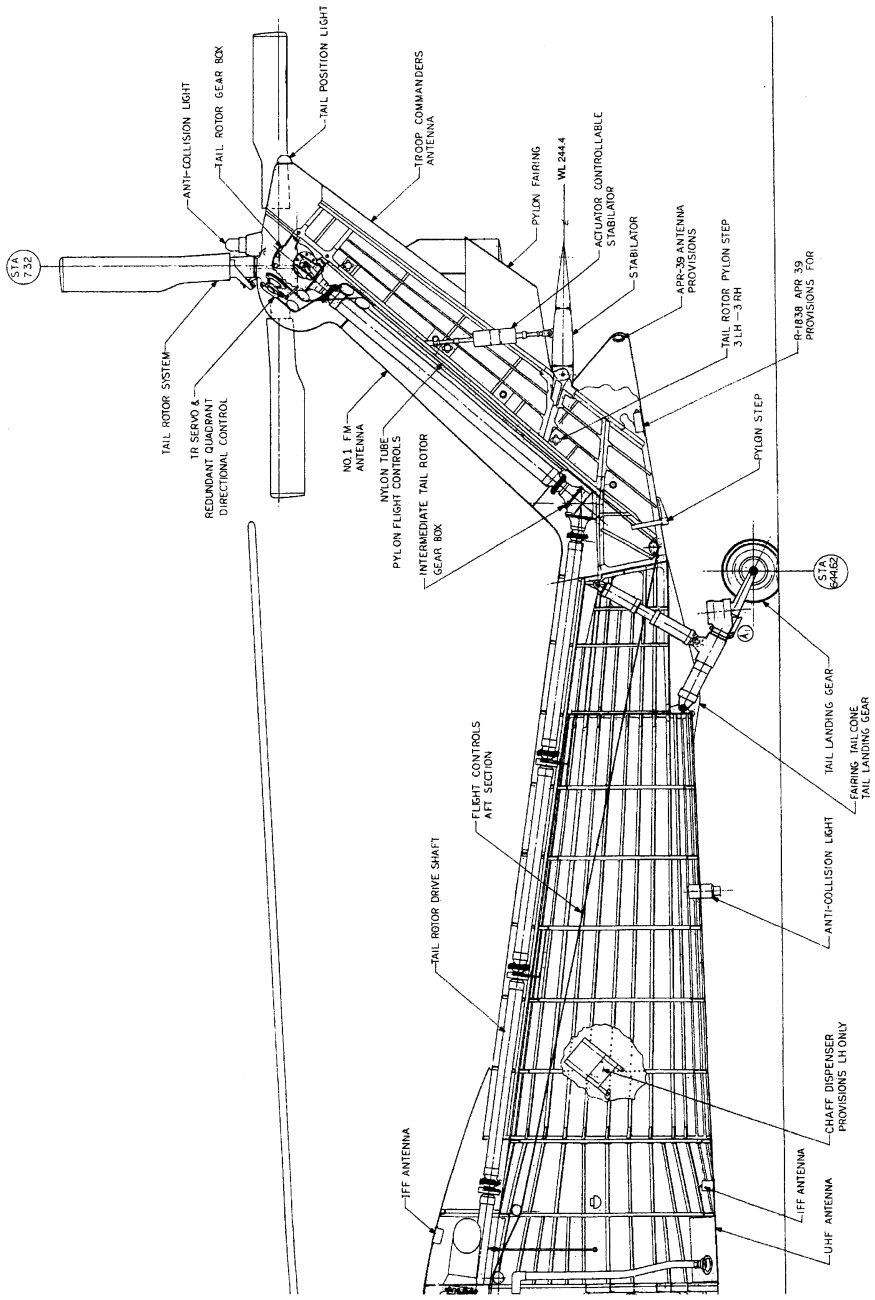

FIGURE 2. INBOARD PROFILE (CONT'D)
(From Dwg. No. 70020–00000 Rev. A)

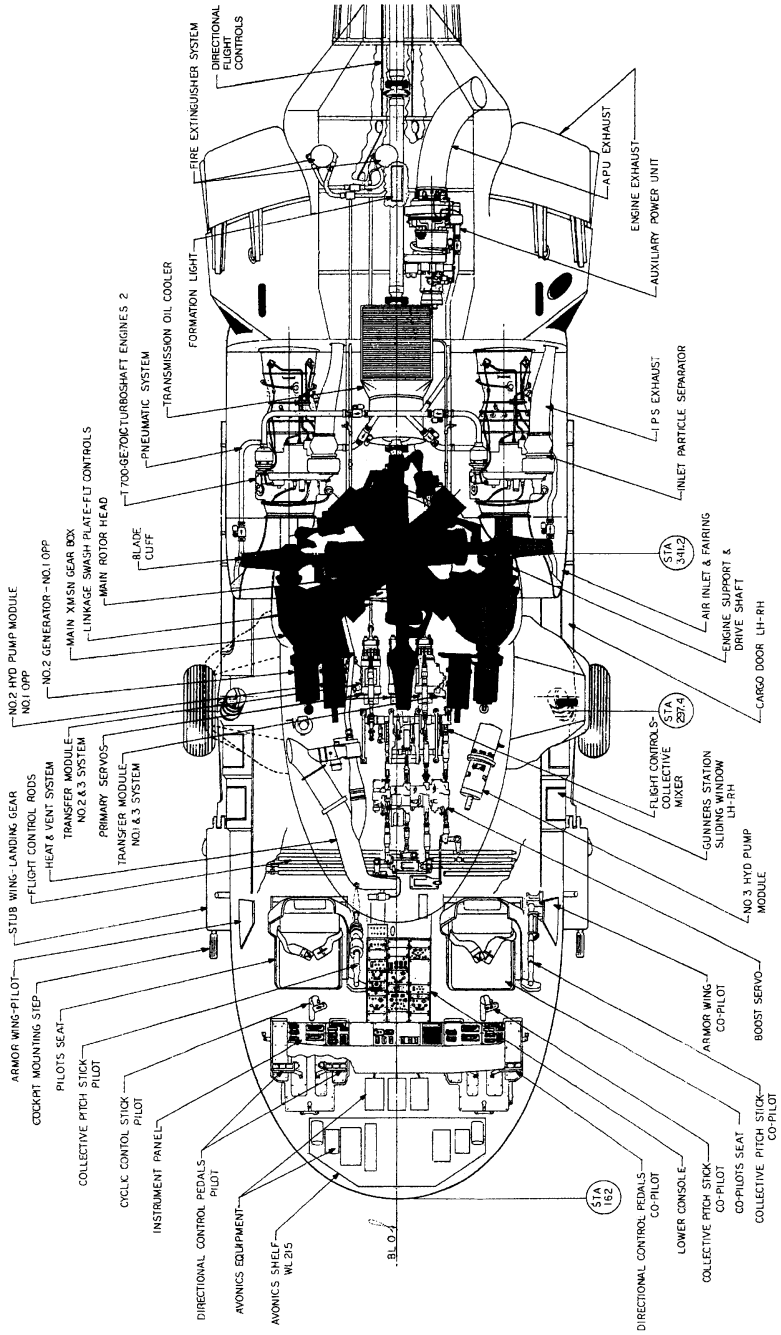

FIGURE 2A. INBOARD PROFILE
(From Dwg. No. 70020–00000 Rev. A)

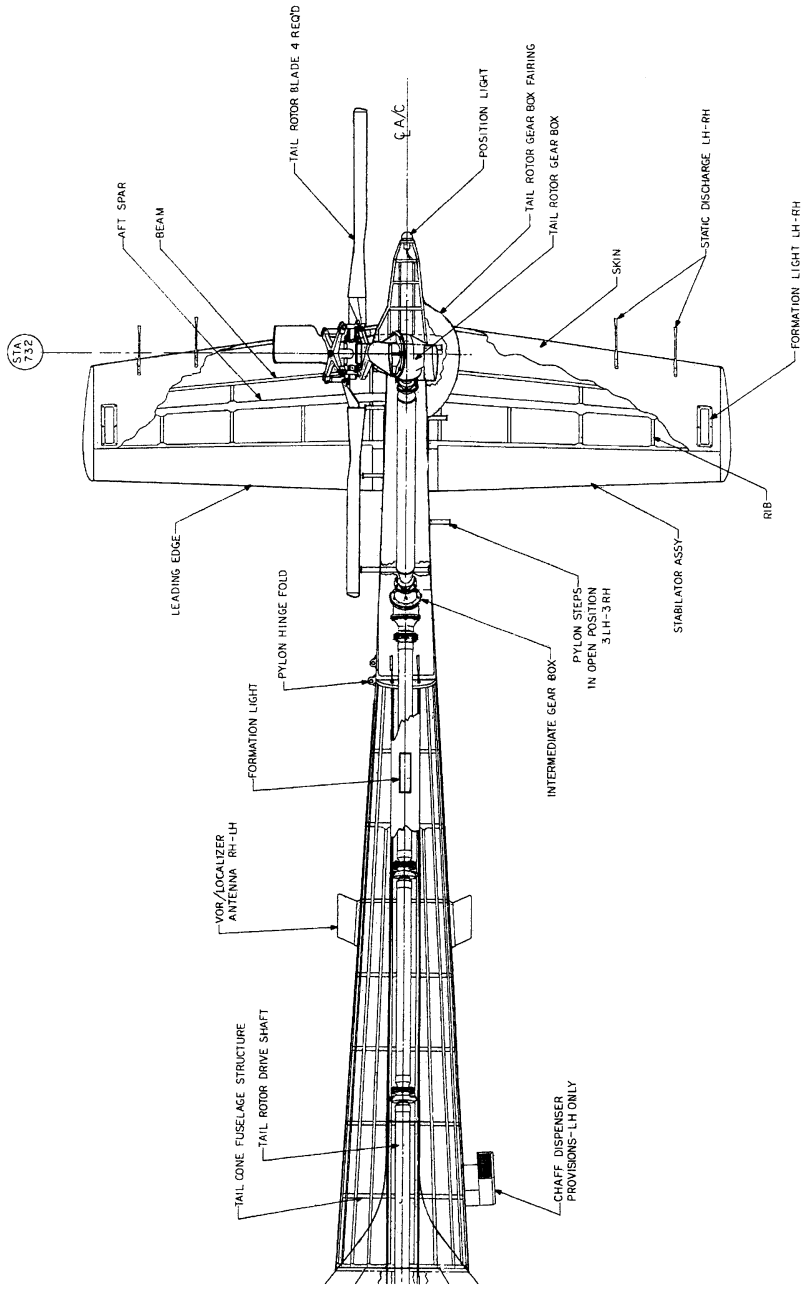

FIGURE 2A. INBOARD PROFILE (CONT'D)
(From Dwg. No. 70020–00000 Rev. A)

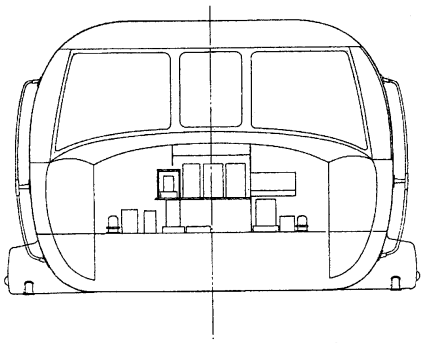

NOSE COMPARTMENT AVIONICS INSTALLATION
LOOKING AFT
STA 167

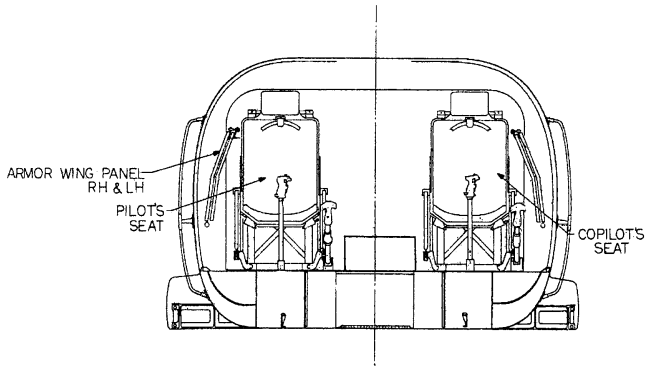

COCKPIT SEATING ARRANGEMENT
LOOKING AFT
STA 210

FIGURE 2B. INBOARD PROFILE
(From Dwg. No. 70020–00000 Rev. A)

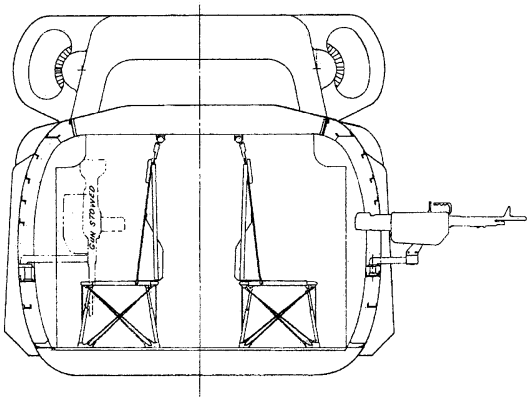

GUNNER'S SEAT ARRANGEMENT
LOOKING AFT
STA 273

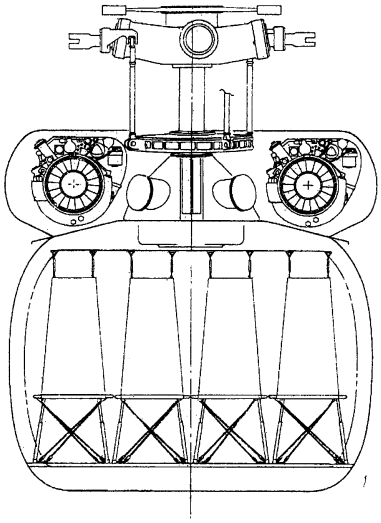

AFT CABIN SEATING
LOOKING AFT
STA 380

FIGURE 2B. INBOARD PROFILE (CONT'D)
(From Dwg. No. 70020–00000 Rev. A)

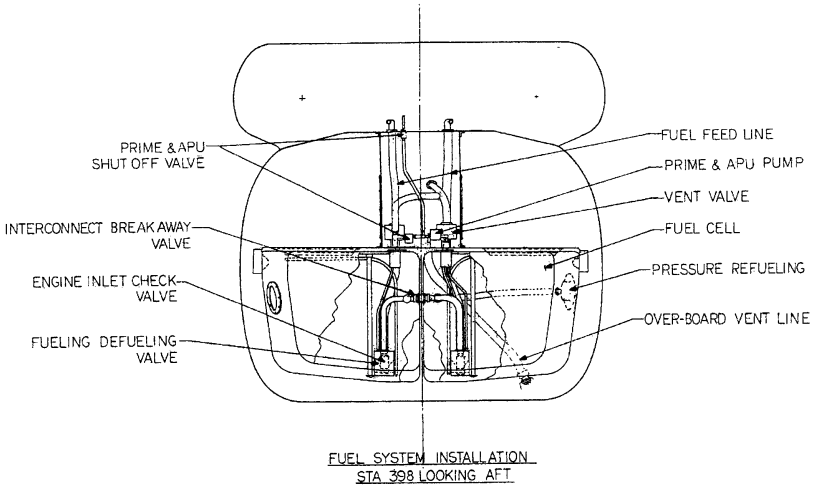

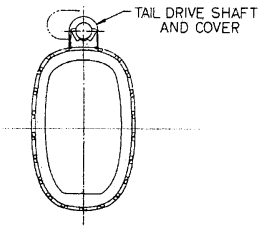

FIGURE 2B. INBOARD PROFILE (CONT'D)
(From Dwg. No. 70020–00000 Rev. A)

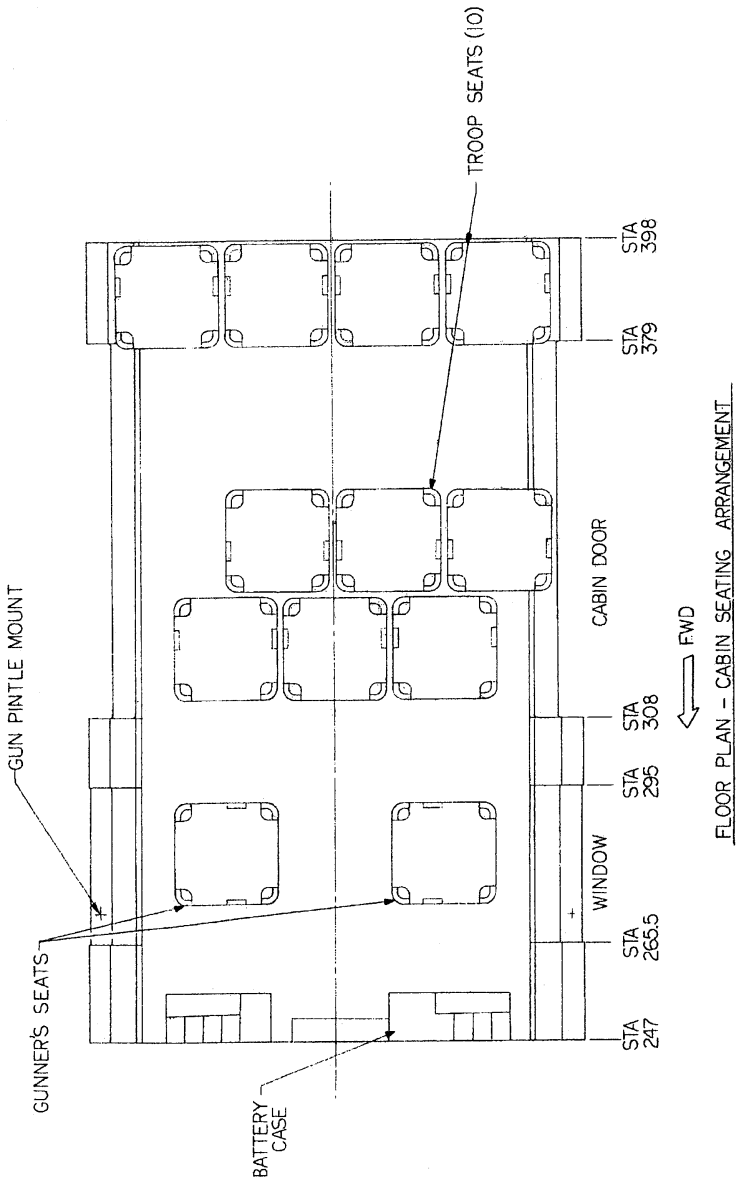

FLOOR PLAN – CABIN SEATING ARRANGEMENT

FIGURE 2B. INBOARD PROFILE (CONT'D)
(From Dwg. No. 70020–00000 Rev. A)

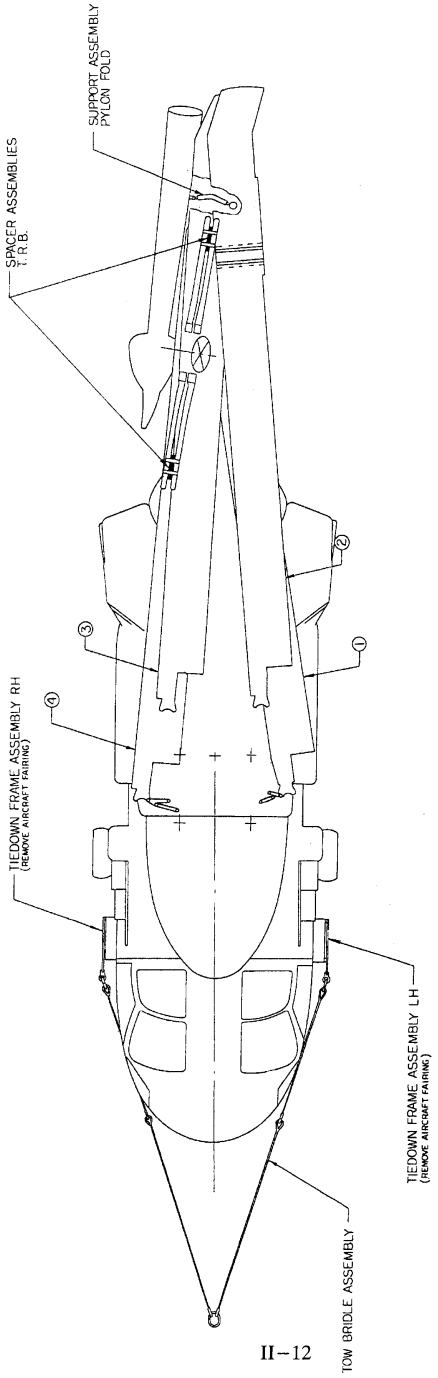

FIGURE 3. AIR TRANSPORTABILITY
UH–60L IN C–141B

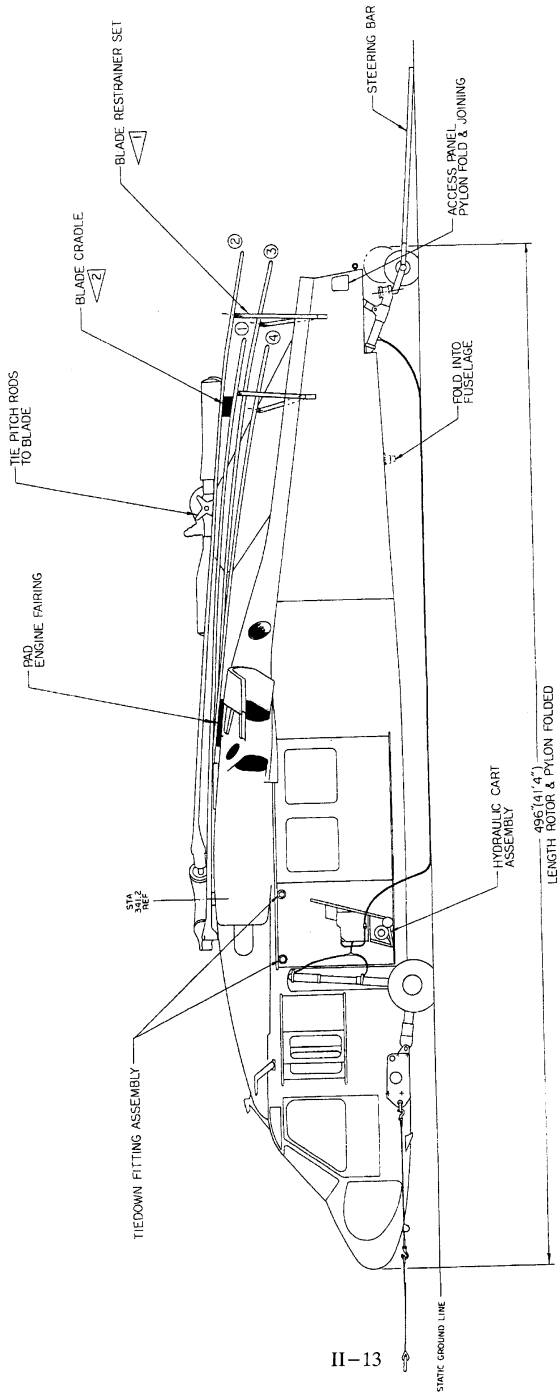

NOTES:
1. BLADE RESTRAINER SET CONSIST OF THE FOLLOWING
   A) BLADE SUPPORT POLES (4)
   B) BLADE HANDLING POLE (1)
   C) BLADE FOLD LINK ASSEMBLYS (2) & ALIGNMENT PIN (1)
   D) POLE RETAINER ASSEMBLYS (4)
2. FOR AIR TRANSPORT OF THE UH–60L IN THE C–141B CARGO ACFT ONLY.

FIGURE 3. AIR TRANSPORTABILITY (CONT'D)
UH–60L IN C–141B

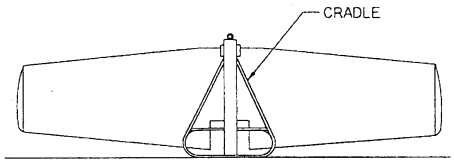

STABILATOR SHOWN IN STORAGE POSITION

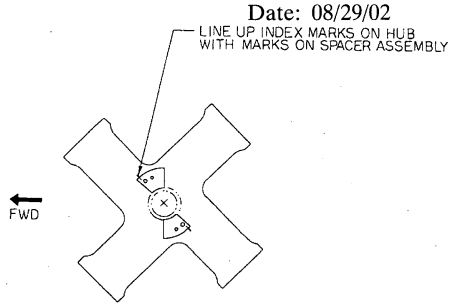

SPACER ASSEMBLY SHOWN INSTALLED

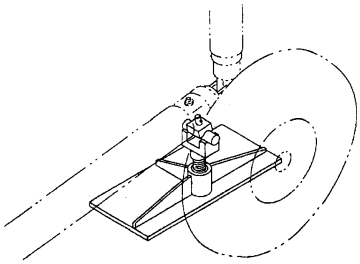

MAIN LANDING GEAR SUPPORT ASSY SHOWN INSTALLED

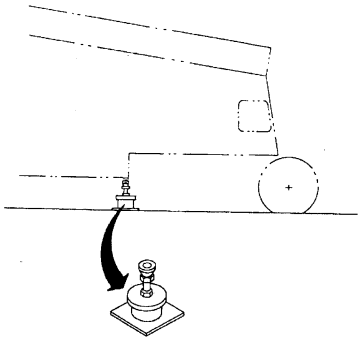

TAIL SUPPORT ASSEMBLY SHOWN INSTALLED

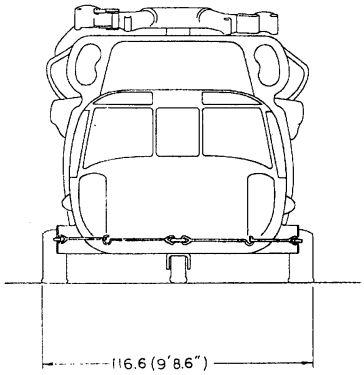

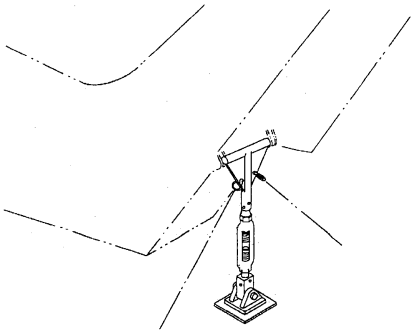

PYLON SUPPORT ASSEMBLY SHOWN INSTALLED

FIGURE 3. AIR TRANSPORTABILITY (CONT'D)
UH–60L IN C–141B

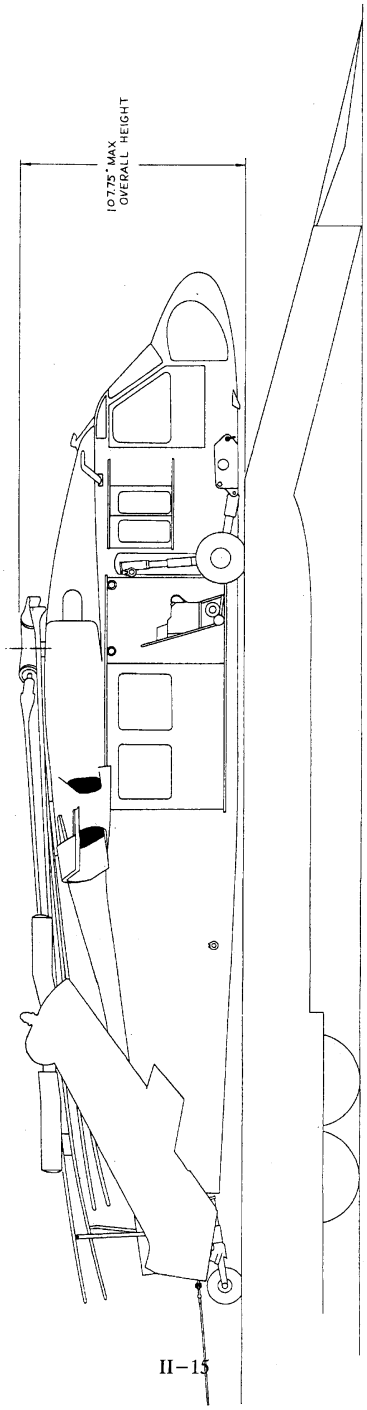

FIGURE 3. AIR TRANSPORTABILITY (CONT'D)
UH–60L IN C–141B

APPENDIX III

CONFIGURATION AUDIT TABLE

TABLE 1
CHANGES FROM

DARCOM–CP–2222–S1000K Dated: June 21, 1992	To	SES–700700 Dated: June 15, 1997

TABLE 2
CHANGES TO

SES–700700
Dated: June 15, 1997

TABLE 3
CHANGES TO

WEIGHTS AND PERFORMANCE REQUIREMENTS OF
SES–700700
Dated: June 15, 1997

APPENDIX III
CONFIGURATION AUDIT TABLE 1

CHANGED PAGES	EFFECTIVITY	K PIDS SCN NO.	SOURCE
26, III–1, III–3	A/C 92–26424 and subsequent excluding 92–26460 through 92–26467	2	ECP 0467 (Digital CISP)
78, 86, III–3	1st A/C Lot XIX and subsequent	17	ECP 0431R1 A1 (TRB De–Ice)
166, III–3	1st A/C Lot XVI and subsequent	24	RFW0135 (Fuel Accuracy)
26, 86, III–3	1st A/C Lot XVIII and subsequent	13	ECP 0454 (Digital Clock)
30, 31, 78, 86, III–3	A/C 93–26498 and subsequent	18	ECN 57641 (Stabilator TE)
III–3	1st A/C Lot XIX and subsequent	9	ECP 0447R3 (TLG Strut)
1, 126, III–3	A/C 92–26408 and subsequent	28	N/A (M&P Index)
2, 151, III–3	A/C 92–26408 and subsequent	27	N/A (Door Marking)
30, 31, 78, 86, III–1, III–2, III–3, III–4	A/C 93–26498 and subsequent	18R1	ECN 57641 (Stabilator TE)
62a, 64a, 67, 82, 87, 124, 126, 240, 241, III–3, III–4	A/C 92–26408 and subsequent	11	N/A (9 Kip Sling Load)
10, 87, 173, 174, III–3, III–4	A/C 92–26408 and subsequent	40	RFD 0076 (Transmission Oil)
9, 15, 26, 102, 187, III–3, III–4	A/C 93–26505, A/C 93–26513 and subsequent	13R1	ECP 0454A2 (Digital Clock)
III–3, III–4	A/C 93–26518 and subsequent	22	ECP 0320R2 (Shaft Balance)
III–3, III–4	December 1995 and subsequent	14	ECP 0445A1 (Box Absorber)

APPENDIX III

CONFIGURATION AUDIT TABLE 1 (CONT'D)

CHANGED PAGES	EFFECTIVITY	K PIDS SCN NO.	SOURCE
III–3, III–4	January 1996 and subsequent	33	ECP 0525A2 (Fuel Line)
178, III–3, III–4	A/C 92–26408 and subsequent	49	N/A (Safety Cable)
10, 14, 139, 151, 231, III–3, III–4	A/C 92–26408 and subsequent	55	N/A (Paint)
106, 107, III–3, III–4	1st A/C Lot XX and subsequent	32	ECP 0449 R4 (Control Rod Ends)
III–3, III–4	A/C 96–26704 and subsequent	25	ECP 0477 (Vent Blower)
III–3, III–4	42nd A/C Lot XX and subsequent	51	LECP 3928 (GB Coating)
III–3, III–4	1st A/C Lot XX and subsequent	57	ECP 0538 (ARN–147/–149)

APPENDIX III

CONFIGURATION AUDIT TABLE 2

CHANGED PAGES	EFFECTIVITY	SES–700700 SCN NO.	SOURCE
–	1st A/C Lot XXI and subsequent	(baseline)	ECP 0530R1 (Side Fuselage)
–	1st A/C Lot XXI and subsequent	(baseline)	ECP 0541 (Growth Spindle)
–	1st A/C Lot XXI and subsequent	(baseline)	ECP 0542 (Chip Detector)
–	1st A/C Lot XXI and subsequent	(baseline)	ECP 0543 (Doppler/GPS)
–	1st A/C Lot XXI and subsequent	(baseline)	ECP 0548 (NVG Lighting)
–	1st A/C Lot XXI and subsequent	(baseline)	ECP 0549 (SINCGARS)
–	1st A/C Lot XXI and subsequent	(baseline)	ECP 0550 (ANVIS HUD)
–	1st A/C Lot XXI and subsequent	(baseline)	ECP 0551 (Crew Window)
–	1st A/C Lot XXI and subsequent	(baseline)	ECP 0553 (SLAB/Utility Light)
–	1st A/C Lot XXI and subsequent	(baseline)	ECP 0555 (MRB Tip Cap)
8–14, 155, III–4, III–5	1st A./C of Lot XXIII and Subsequent	1	
2, 130, III–4, III–5	A/C Seriual #98–26826: Lot XXII	2	
vx, 15, 168–169, III–4, III–5	A/C 97–26738 through A/C 97–26743	3	
III–4, III–5	16th A/C of Lot XXII and subsequent	5	
14, III–4, III–5	1st A/C Lot XXI and subsequent	6	
xiv, 162, III–4, III–5	1st A/C Lot XXI and subsequent	7	
xv, 168, III–4, III–5	1st A/C Lot XXIII and subsequent	8	

APPENDIX III

CONFIGURATION AUDIT TABLE 2 (CONT'D)

CHANGED PAGES	EFFECTIVITY	SES–700700 SCN NO.	SOURCE
xv, 5, 62, 64. 86, 133, 143, 145, 147–148, 152, 155 , 159, 162, 168, III–4, III–5	1st A/C Lot XXI and sub–sequent	9	
iv, viii, xvii, 17–18, 26–42, 60–61, 63, 65, 71–72, 86, 105–107, 115, 150, 161, 164, 168, 172, III–4, III–5	A/C Serial #97–26745 and subsequent	10	
xiv, xvii, 5, 17–18, 36, 60–61, 162, III–3, III–5	Field Retrofit of all UH–60Ls	11	
xvii, 1, 3, 5, 8–14, 17–18, 26–42, 60, 61, 107, 130, 168–168a, III–3, III–5	Lot XXVI and subsequent	12	EXP 0574 (AFCC)

APPENDIX III
CONFIGURATION AUDIT TABLE 3
CHANGES TO WEIGHTS AND PERFORMANCE REQUIREMENTS

SCN	SOURCE	Weight Empty (lbs) Para. 3.2.2.1.2	Primary Mission Gross Weight (lbs) Para. 3.2.2.1.5	Vertical Rate of Climb (fpm) Para. 3.2.1.1.1.1 a.	Cruise Speed (ktas) Para. 3.2.1.1.1.1 b.	Primary Mission Endurance (hrs) Para. 3.2.1.1.1.1 c.	Alternate Endurance (hrs) Para. 3.2.1.1.1.2	One Engine Inoperative Speed (ktas) Para. 3.2.1.1.1.3 a.	One Engine Inoperative Service Ceiling (ft) Para. 3.2.1.1.1.3 b.
1	Administrative	0	0	0	0	0	0	0	0
2	N/A	0	0	0	0	0	0	0	0
3	ECP 0561	0	0	0	0	0	0	0	0
5	ECP 0563	0	0	0	0	0	0	0	0
6	ECN 10935A	+22.2	+22.2	0	0	0	0	0	0
7	N/A	–0.8	–0.8	0	0	0	0	0	0
8	ECP 0559	0	0	0	0	0	0	0	0
9	Administrative	+2.7	+2.7	0	0	0	0	0	0
10	N/A	0	0	–46	0	0	0	0	0
11	ECP 0578	+23.0	+23.0	–16	0	0	0	0	–32
12	ECP 0574	–3.6	–3.6	+3	0	0	0	0	+5

SES-700700A

29 August 2002

LAST PAGE IDENTIFICATION: The last page of this specification is identified by an asterisk (*) immediately to the right of the last page number.

Notice: When Government drawings, specifications, or other data are used for any purpose other than in connection with a definitely related Government procurement operation, the United States Government thereby incurs no responsibility nor any obligation whatsoever; or when in any way supplied the said drawings, specifications or other data, it is not to be regarded by implication or otherwise as in any manner licensing the holder or any other person or corporation, or conveying any rights or permission to manufacture, use, or sell any patented invention that may in any way be related thereto.

CUSTODIAN:	PREPARING ACTIVITY:
ARMY (AV)	U.S. Army Aviation and Missile Command
	Redstone Arsenal, Alabama
	Release IAW ERR AV-10020
	10 December 2002